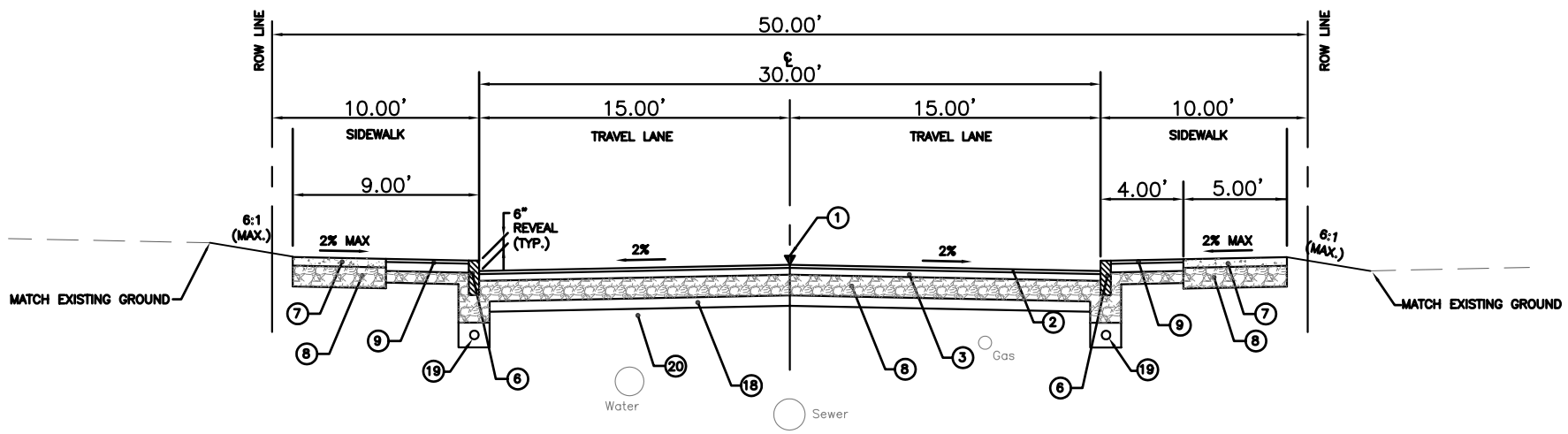

TYPICAL SECTION – LOCAL
Not to Scale

LEGEND

1. POINT OF APPLICATION OF GRADE
2. 1.5" BITUMINOUS CONCRETE – CLASS 1
3. 3.5" BITUMINOUS CONCRETE – CLASS 4 BASE COURSE
6. 6"x20" GRANITE CURBING
7. 5" AND 8" 4000 PSI CONCRETE WALK
8. 12" PROCESSED TRAPROCK
9. LOAM AND SEED ON 6" TOPSOIL OR 2" BIT. CONCRETE SURFACE ON 12" TRAPROCK TO BE DETERMINED BY THE ENGINEER.
18. 6" TO 12" BANK RUN GRAVEL
19. 6" UNDERDRAIN WHERE REQUIRED
20. SUITABLE SUB GRADE SHAPED AND COMPACTED

DESIGN CRITERIA:

DESIGN CONTROLS:

Design Speed:	25 mph
Level of Service:	C–D
ROW Width:	50'

ALIGNMENT ELEMENTS:

Stopping Sight Distance:	155'
Minimum Radius:	148' (e=4%)
Minimum Grade:	0.5%
Maximum Grade:	12%
Vertical Curve (k):	
Crest	12
Sag	26

CROSS SECTION ELEMENTS:

Curb to Curb Width:	30'
Travel Lane Width:	15'
Shoulder Width:	0
Pavement Cross Slope:	1.5%–2.0%
Sidewalk Width:	5'
Tree Belt	4'
Sidewalk Cross Slope:	2% Max.

Design criteria based on "AASHTO–Geometric Design of Highways and Streets", 4th Edition, 2001.
This manual should be referenced to obtain the accurate design values for the applicable component range.

Introduction:

This drawing is provided for the purpose of establishing the minimum design guidelines with respect to the construction of a Local Street, as defined by "A Policy on Geometric Design of Highways and Streets, 2001" by American Association of State Highway and Transportation Officials", (AASHTO), current edition, or as amended within the City of Hartford. The materials, dimensions, utilities and amenities shown are subject to the approval of the City of Hartford, Department of Public Works under the applicable provisions of the City of Hartford Municipal Code.
The City reserves the right to amend or modify any part of these guidelines for any reason or purpose.

Roadway Geometry shall conform to the requirements of Chapter 7, Rural and Urban Arterials of the AASHTO manual.

Utilities:

Line assignment for utillity facilities shall be located within the curb to curb width. Such line assignments will be issued by the Department of Public Works.

Illumination:

Illumination design shall conform to IESND standards with a 1.0 footcandle average light level within the ROW. Fixtures shall be "Dark Skies" compliant unless otherwise approved by the Director of Public Works.

U.F.A.S.:

Handicapped accessible ramps shall be installed at every location where a pedestrian street crossing is planned. The ramp shall not exceed a slope of 1:12. Any design shall be compliant with current UFAS requirements.

Traffic Calming:

The Department of Public Works has developed a City wide Traffic Calming Master Plan. street projects shall incorporate elements of this plan.
The City Engineer should be consulted as to which traffic calming device is to be incorporated on a specific roadway.

Permits

Applicable permits that may be required are, but not limited to: City of Hartford, Department of Public Works Construction Permit, Metropolitan District Developer's Permit, DEP Stormwater Discharge Permit. It is the developer's responsibility to verify and obtain all required permits.

Specifications:

Construction shall conform to the following specifications: City of Hartford Technical Specifications, Metropolitan District Standards and Specifications, State of Connecticut Department of Transportation Standard Specifications for Roads, Bridges and Incidental Construction. Other specifications relative to specific utilities may be applicable.

Revisions	By	Date

Notice
Manual revisions to this drawing are prohibited. The use of this drawing by any corporation, or by any person, for any reason, without written authorized consent of The City of Hartford is prohibited.

Sign-Offs	By	Date
Drawn		
Checked		
Recommended		
Approved		
Recorded		

TYPICAL ROADWAY CROSS SECTION
City of Hartford - Department of Public Works
Hartford, Connecticut, 06103

Drawing Scale: As noted | Job No. 405121 | Date: August 2006

Hartford – New England's Rising Star

City of Hartford, Connecticut
Department of Public Works

TYPICAL ROADWAY SECTIONS
LOCAL

Sheet No.

File Name: