NEC FUTURE

A Rail Investment Plan for the Northeast Corridor

Comment Summary Report Appendix Part 3: L-P

July 2016

U.S. Department of Transportation

Federal Railroad Administration

COMMENT SUMMARY REPORT APPENDIX:

Comments Submitted on the Tier 1 Draft EIS

The Comment Summary Report Appendix contains a compilation of all submissions received on the NEC FUTURE Tier 1 Draft EIS during the public comment period, which began on November 13, 2015 and closed on February 16, 2016. The comments are organized alphabetically by the commenter's last name (or organization name). Due to file size, the appendix has been split into four separate files covering the letters A-D, E-K, L-P, and Q-Z. Personal information for individuals has been redacted to protect their privacy. Other than redacting personal information, the FRA did not edit these original submissions in any way. Typographical or other errors are as they were received from the author via online submission, email, U.S. mail, or public hearing transcript. The FRA makes no representation as to the factual content of submissions received. Responses to the comments will be provided in the Tier 1 Final EIS.

Please refer to the main body of this Comment Summary Report for more information on the Tier 1 Draft EIS public comment period, a summary of the comments, and how the FRA is using the comments in the process to identify a Preferred Alternative for NEC FUTURE.

NEC DEIS Comments - RECORD #87 DETAIL

Status : Pending
Record Date : 12/23/2015
First Name : John
Last Name : Laadt
Stakeholder Comments/Issues :

Hi, I would like to voice my support for the Alternative 3 plan for the Northeast Corridor. I think it is important that we lay out a blueprint of future investment and infrastructure that we should strive for even if ultimately the funding does not become available for every project.

As a Boston transplant, via Long Island, I travel the Northeast Corridor regularly and the need for increased connectivity couldn't be greater. Currently the only way to connect to New England and points north without travelling through New York City is to travel via the two ferry options located on the North Shore. A number of years ago an automobile bridge or tunnel across the Long Island Sound was proposed and rejected by a number of stakeholders. The vision for the Northeast Corridor calling for a train tunnel/bridge could prove to be a more compelling alternative and would help reduce the reliance on the automobile for most of Long Island.

In Connecticut, there are a lot of communities that have fallen in prosperity which could be revived by a robust system like this. For these reasons and more I am strongly in support of Alternative 3.

NEC DEIS Comments - RECORD #2171 DETAIL

Status : [redacted]

Record Date : 2/15/2016

First Name : Dan

Last Name : Labrecque

Stakeholder Comments/Issues :

Dear Federal Rail Administration,

"I oppose Alternative 1 of the Northeast Corridor Futures proposal because it will destroy the campus of Lyme Academy College of Fine Arts of the University of New Haven."

Okay, number three, Mark Lacari.

MR. LACARI: Thank you all for taking the time to make this meeting happen.

I'm sure all of us thought that -- before I go into my speech, I'm sure all of us thought this has been a crazy December. I think all of would be chilling right now instead of, you know, having to wear short-sleeved shirts.

But getting back to the point of why I'm here, I am a 23-year-old, lower senior student at the College of Staten Island and I am also with the High Speed Rail of America Club.

The High Speed Rail of America Club is a nationwide college advocacy group to research, promote and advocate bringing high speed rail technology to the United States and the rest of North America.

A lot of the people who recognize us from advocating and promoting high speed rail products from:

All Aboard Florida, now known as the Bright Line;

Tri Rail in Miami;

Texas Central Rail, with a full train between Dallas and Houston;

All Aboard Erie;

And, as well, today, the Northeast Corridor.

We were able to succeed most recently in making All Aboard Florida becoming a reality and construction is already underway and will probably be done by 2017.

The Northeast Corridor, as we all know, is one of Amtrak's busiest corridors. However, the current system is a shadow of its former self. The infrastructure is worn out and needs massive replacement of outdated signals, outdated bridges, which in some cases as we all know, are more than or at least over 100 years old. And also the replacement of outdated rolling stock, as the gentleman before mentioned earlier.

To put it shortly, and I hate to use this as a wording, right now our Northeast Corridor is a third world rail system in a first world country. As if that was not bad enough though, it's about to get worse. By 2050, the Northeast Corridor's populations between the major cities of Boston, New York, Philadelphia, Baltimore and even Washington, D.C., are expected to grow by as much as 35.2

percent. That's almost over 80 million people.

Our corridor right now can't even handle, you know, a single draw bridge incident, as we all know with Portal Bridge. So if we have a breakdown, we're in deep trouble.

If no action is taken immediately, we risk having to run an outdated system that will not be able to handle such growth in the future. That is why the solution to this crisis is simple. We must invest and expand the Northeast Corridor and bring it up to true, high speed rail.

In Europe and Asia, high speed trains are zipping along at 220 miles an hour, while barely on some parts of the Northeast Corridor, we're able to even achieve 100 miles an hour, if not 150 miles an hour. That's literally shameful for a nation that was once the biggest rail leader on the globe.

Because of this, this reliability in service -- well, this increase of service reliability, they have become a highly popular mode of transportation. And because they are so popular and reliable, most Japanese and European rail companies are able to run a profit. That isn't some small thing. That's a serious thing that could help lead to economic growth in the long run of this country.

Also, with many people having come back from countries that do have advanced high speed rail, the demand is growing and continues to grow and the outcries for not doing high speed rail continue to grow even more.

In the words of Winston Churchill, he -- his own statement speaks it clear, clearly right here, right now of what we face. I never worry about action but only inaction. If we fail to act, we will suffer. And I mean it, we will suffer completely, if we do not meet the future needs. We will suffer the consequences of our poor judgment and our own poor attitude to not fully invest and upgrade the entire Northeast Corridor.

That's something that this generation does not deserve to witness and that's something that the generation that's coming up does not deserve to witness.

This nation used to be the world leader in its rail system and it's time to lead the world again in high speed rail. It's time to rebuild and reinvest in the Northeast Corridor.

Thank you.
THE MODERATOR: Thank you, Mark.

NEC DEIS Comments - RECORD #1224 DETAIL

Status : [redacted]

Record Date : 2/13/2016

First Name : mike

Last Name : lacasse

Stakeholder Comments/Issues :

Unfortunatly Joe, I have had to close down my business due to the poor economy and high taxes in the town of plainfield. Now I have no job and I'm about to be sued by the town and all the vendors I owe money too. I have been eating peanut butter and crackers for the past month

NEC DEIS Comments - RECORD #1127 DETAIL

Status : [redacted]

Record Date : 2/12/2016

First Name : William

Last Name : Lacey

Stakeholder Comments/Issues :

I am opposed to this New Rail System. Many of the towns that this new rail segment would cut through are hundreds of years old, and are home to numerous cultural landmarks and buildings on the National Register of Historic Places. CT is not in any financial situation to support said infrastructure. The citizens of the communities it falls in and around should be afforded opportunity for public hearings.

NEC DEIS Comments - RECORD #2487 DETAIL

Status : [redacted]

Record Date : 2/16/2016

First Name : Candice

Last Name : LaConti

Stakeholder Comments/Issues :

This proposal will decimate the Connecticut shoreline - the one main tourist attraction in the state. Historic homes and museums that are among the oldest in the country will be destroyed. This also spells trouble for the already suffering economy. Additionally, we have significant concerns about the environmental impact of such a plan. We vote no!

NEC DEIS Comments - RECORD #1679 DETAIL

Status : [redacted]
Record Date : 2/15/2016
First Name : Owen
Last Name : Lacourciere
Stakeholder Comments/Issues :

To whom it may concern,
This email is in regard to the NEC Future Alternative One Project that affects Old Lyme, CT. As a resident of the town, I strongly oppose this initiative and respectfully request your consideration in eliminating this course of action from your plans. Thank you,

Owen Lacourciere
Oakridge Forest Association
Old Lyme, CT

NEC DEIS Comments - RECORD #2390 DETAIL

Status : [redacted]
Record Date : 2/15/2016
First Name : Rachel
Last Name : Lacourciere
Stakeholder Comments/Issues :

To Whom It May Concern,

We are writing this letter to respectfully urge you to cease any developing plans for the proposed rail through the center of Old Lyme, CT. The town center is home to many historical landmarks, quaint shops, and unique tourist destinations. We strongly oppose any plan that would disrupt and/ or destroy the downtown that so many people have worked to build and maintain for many years. By changing the charm of our historical New England town, this plan would potentially harm both the environment and the local economy. Thank you for listening to our opinions and we ask that you keep them in mind when moving forward.

Thank you,

Rachel and Tom Lacourciere
[redacted]
Old Lyme, CT

Sent from my iPhone

Okay. Hugh. Just make sure you introduce yourself. I know you but they don't.

MR. LACY: Sure.

My name is Hugh Lacy. The last name is spelled, L-a-c-y. First name, H-u-g-h.

I just have a brief thought and comment on this. I think overall perhaps the plans, you're thinking too small. I think that you're talking about increasing speeds, at least in parts of this, up to 160 miles an hour. As we've all probably read, the trains, the Japanese trains and the trains in Europe travel much faster.

The way you're able to go faster is to keep your alignments pretty straight. And the way to do that in the urban areas is place your -- your tracks in tunnels and make them underground. It avoids a lot of interferences with service structures. And with the decreased cost of tunnels, the -- it's becoming more economical. It's not a cheap solution but I think if we're going to have the trains compete -- reduce the number of airplanes in the skies in these shorter haul distances between New York and Washington, D.C., I think it's essential that these trains be much faster, that we spend more money and do it right the first time.

I, just as background, I'm a civil engineer and in the 1980s I worked on the Northeast Corridor improvement when we were able to increase the speed to 120 and 125 miles an hour. So I -- that's my comment.

THE MODERATOR: Great, thank you. Thanks a lot.

Is there anyone -- any other first time speaker?

(No response.)

THE MODERATOR: Okay, Debra, do you want to speak again?

(Laughter.)

NEC DEIS Comments - RECORD #999 DETAIL

Status : Action Completed

Record Date : 2/11/2016

First Name : Hugh

Last Name : Lacy

Stakeholder Comments/Issues :

I believe that the EIS planners are thinking too small with train speeds that are much lower than existing trains in Europe and Japan. If we are ever going to substantially reduce short haul plane traffic in the NEC. To accomplish this, the plans for Alt III should include at least 2 dedicated passenger tracks that are as straight as possible with large radius curves with few stops between Wash. DC and NYC and Boston. In order to accomplish this, the alignment should be underground in urban areas and in areas of uneven ground. This will be costly to construct but the benefits will be well worth it. The actual cost may not be much more when the cost of acquiring land, relocating utilities and constructing highway bridges and the cost of environmental impacts are fairly estimated. The decision to place the East Side Access at a deep level to avoid shallow impacts on NYC is similar to what I am proposing.

NEC DEIS Comments - RECORD #57 DETAIL

Status : Pending

Record Date : 12/8/2015

First Name : Casey

Last Name : LaFerrara

Stakeholder Comments/Issues :

The Alternative 3 for rail expansion makes the most sense from an environmental perspective. The U.S. has fallen far behind the rest of the world in it's passenger rail services. There is no reason for the long trip times and service delays. There are clear paths to remedy issues on the NEC and make it a world class corridor. I urge the FRA to invest in this corridor for a lasting impact, not a temporary fix.

NEC DEIS Comments - RECORD #2538 DETAIL

Status : Pending

Record Date : 2/16/2016

First Name : Joseph

Last Name : LaGambina

Stakeholder Comments/Issues :

Dear Federal Rail Administration,

"I oppose Alternative 1 of the Northeast Corridor Futures proposal because it will destroy the campus of Lyme Academy College of Fine Arts of the University of New Haven."

NEC DEIS Comments - RECORD #551 DETAIL

Status : Action Completed

Record Date : 2/4/2016

First Name : David

Last Name : Lahm

Stakeholder Comments/Issues :

I am writing to you to oppose the commuter rail line that has been proposed to run from Old Saybrook, Connecticut to Kenyon, Rhode Island. Without even discussing the proposed route I would like to ask one simple question: why? I can only think that this is an attempt to get cars off of I95 but I am puzzled because none of the towns and cities that it is to cut through are walkable. Why would someone drive to and park at point A, get on a train, get off at point B only to either have someone pick them up or call a cab, which presupposes that there is cab service in South Eastern Connecticut? The answer is they would not. Why should we spend billions of dollars on this White Elephant? Of course then there is the issue of location of the tracks. The proposed pathway looks more like the roller-coaster at an amusement park than a serious mass transit proposal. Build a rail bridge diagonally across the Connecticut River from close to the current rail bridge on the West Bank to almost the Baldwin Bridge on the Old Lyme side? From the air this will look like some giant Zorro has left his mark on the mouth of the Connecticut River. The piers and pilings will ruin a pristine recreational boating area. Further inland the path somehow jumps I95 at approximately the Lyme Art Academy. The structure to carry a train over the highway will be enormous and be over sixty feet tall. Not to mention the approach structures. Unlike roller-coasters real trains do not deal well with sharp inclines. The ramp for this overpass would have to start at the river bank and be in the range of 120 feet wide. Just the first mile and a half of this project lays waste to the character of the South Eastern Connecticut Shoreline. This is Government run amuck without thought to how this affects the people that Government is supposed to represent. I am extremely intrigued that this proposal sprang forth like Athena from the shell fully developed without an inkling to the local governments. I am familiar with government planning cycles and for us to be at this point the "Good Idea Fairy" must have whispered into some bureaucrat's ear two years ago. This is not how government should treat its people. Connecticut already has a 500 million dollar busway where empty busses raddle through the towns; we don't need a 70 billion dollar empty rail system. Please stop this monstrosity now. I feel like I am standing at the edge of the rabbit hole waiting for a well-dressed bunny to pass by.

David M. Lahm

Lyme

NEC DEIS Comments - RECORD #2641 DETAIL

Status : Action Completed

Record Date : 2/16/2016

First Name : Cynthia

Last Name : Lamb

Stakeholder Comments/Issues :

I oppose Alternative 1 of the Northeast Corridor Futures proposal because it will destroy the campus of Lyme Academy College of Fine Arts of the University of New Haven.

NEC DEIS Comments - RECORD #1834 DETAIL

Status : Pending

Record Date : 2/15/2016

First Name : Kimberly

Last Name : Lamberto

Stakeholder Comments/Issues :

I oppose Alternative 1 of the Northeast Corridor Futures proposal because it will destroy the campus of Lyme Academy College of Fine Arts of the University of New Haven.

NEC DEIS Comments - RECORD #3086 DETAIL

Status : [redacted]
Record Date : 2/19/2016
First Name : Scott S.
Last Name : Lambrecht
Stakeholder Comments/Issues :

You are nuts.
Sacrifice the charm of this town?
I can't believe the thought process with the federal railroad commission.
This ain't New York
Sent from my iPhone

NEC DEIS Comments - RECORD #984 DETAIL

Status : [redacted]
Record Date : 2/11/2016
First Name : Salvatore
Last Name : LaMesa
Stakeholder Comments/Issues :

To whom it may concern:

Really! I can only assume after a long day someone simply drew a line on a map to get themselves home quickly. Alternative one would destroy a swath of Connecticut and New England history in Old Lyme, CT. Please reconsider this travesty blithely called Alternative 1.

Salvatore LaMesa
[redacted]
Old Lyme, CT 06371

NEC DEIS Comments - RECORD #3003 DETAIL

Status : Unread

Record Date : 2/16/2016

First Name : Blake

Last Name : Lamothe

Stakeholder Comments/Issues :

Palmer Union Station is a natural asset to the community itself and for patrons to potentially arrive and depart as an operating passenger rail station. There are other locations mentioned further in other cities, however, neither of these sites have any connection to the central corridor line. Palmer Union Station was and can be the central 'hubspot' again with connections to New London and Montreal via Springfield and Boston.

In the long-term, having the connection at Palmer Union Station is the most logical location because it can provide connections to numerous other locations across New England.

NEC DEIS Comments - RECORD #2213 DETAIL

Status : Pending
Record Date : 2/15/2016
First Name : Scarlet
Last Name : Lamothe
Stakeholder Comments/Issues :

Implementing high-speed rail and rail service across the northeast is a huge step in expanding public transportation in the United States. In particular, having multiple stops along it's route; in Palmer Massachusetts. Increasing the number of available stops, increases the advantage for people to make use of public transportation, especially now that our world has become more environmentally conscious.

I have had the experience of spending a semester abroad in Europe in the spring of 2015. I had the time of my life. I traveled to a total of nine different countries, some of which I visited multiple times. What I have seen over in Europe via transportation methods is the high-speed trains, the city-bike, and underground/above-ground subway. The high-speed trains were always full of people, traveling to work, leisure, shopping, etc. As I was sitting one day looking at the window, I saw that we were traveling faster than the cars along the highway parallel.

This is just one of the reasons people will choose public transportation over a car. Quicker, eco-friendly, safer, talking to people, etc.

I am a college student from Western New England University in Massachusetts, and I believe that expanding public transpiration, particularly rail, is an important factor for the United States to become a more eco-friendly environment that allows its citizens with a decent ease of travel.

NEC DEIS Comments - RECORD #673 DETAIL

Status : Action Completed

Record Date : 2/10/2016

First Name : Deborah

Last Name : Lamperti

Stakeholder Comments/Issues :

I have frequented this locations many times for Bird watching. Putting the NEC through is refuge would do irreparable harm to this wonderful refuge.

Please consider another location.

A conservative Voter!

Debbie Lamperti

NEC DEIS Comments - RECORD #538 DETAIL

Status : [redacted]
Record Date : 2/4/2016
First Name : Ann
Last Name : Lander
Stakeholder Comments/Issues :

15 Town Woods Rd.

Old Lyme CT 06371

February 3, 2016

Dear Reader:

I am opposed to the proposed Alternate A rail line.

In 1957 my family moved to Old Lyme. I was a teenager and I have remained in thislovely community. The leaders throughthe years have worked to protect the history, the ambiance, the character and the ecology of Old Lyme. Despite the Rte 95 which traverses this area,the town has managed to keep this special atmosphere of historic homes, makingthis a relaxing area and a place whereresidents who do not live in this part of time come to walk and enjoy the day. In the early 1900s impressionistic artistsmade the Lyme Street area of the town their summer home. In this area today we have the FlorenceGriswold House where several of them lived. This is now an active art gallery and historic museum. On the north side is the Bee and Thistle Innand on the right side the Lyme Art Association. Across the street is the Old Lyme Inn. On the south side of Rte 95 is the Lyme Art Academy which is a certifieduniversity located in buildings that are either historical or constructed tokeep that architecture. The commercialdistrict is located on Halls Road which is perpendicular to Lyme Street.

Recently it has come to light that a new rail line may beconstructed through this area destroying our town. From the moment the line crosses theConnecticut River and it will be destroying numerous homes as it continues fromthe river to the other side of the town. It will also be destroying commercial establishments and as I understandit our transfer station. It will foreverchange this town, OUR TOWN! It will not be a community that attracts tourists, tourists interested in art and culture.

Yes, there is a rail line that passes through the towncloser to the beaches. There are homesnear it but the vast majority of these homes were built following theconstruction of the line. They are notthe heart of the community that tourists come to enjoy. They are not the true heritage of OldLyme. Riders on the trains between NewHaven and Rhode Island enjoy many beautiful views of Long Island Sound.

It is difficult to see exactly where the line is going(unless I go to the New London Library). I understand from the website that there are different plans and I amcompletely puzzled in studying them as they each have a lot of variations. Thefocus seems on the ecology and environment and the report itself says thatthere would be a definite negative impact on the local environment. Yet it is Alternate A??? I am also puzzled that there is a deadlinefor a decision when Alternate C , as far as I can tell, is not even a finishedproposal.

I oppose the proposed Alternate A.

Sincerely,

Ann Lander

NEC DEIS Comments - RECORD #1639 DETAIL

Status : Unread

Record Date : 2/15/2016

First Name : Mark

Last Name : Lander

Stakeholder Comments/Issues :

I have already signed a letter, as an officer of the local historical society, from several town organizations opposing alternative 1. I am now contacting you as a long-time, former, resident of Old Lyme and present taxpayer. I see nothing good about this proposal. The CT River does not need a third bridge in a half-mile (have the Coast Guard and Army Corps of Engineers been brought into this?), there would be severe environmental repercussions for the railroad crossing wetlands and forests. The historic district would be sliced in half by what can only be an industrial looking embankment or trestle, the now world-famous Lyme Academy College of Fine Arts of the University of New Haven would be lost forever along with its primary building, the 200 year-old Sill House, one of Old Lyme's architectural treasures. The almost mile-wide impact zone would forever affect the town with noise and even the years-long construction project itself would create untenable noise, dirt and dust, wear and tear on local roads as well as on the already burdened I 95. There would be not one iota of benefit for Old Lyme which would instead see its cultural and artistic heritage destroyed and its environment despoiled.
I am further bothered by the process up to this point. No one seems to have been made aware of this until a matter of a few weeks ago- no public announcements, no meetings, no information to state and local officials.
In a related vein, I have a copy of a proposal sent out less than two years ago by AMTRAK concerning the replacement of the existing 1917 rail bridge across the river. It appears that the bridge is structurally safe but mechanically cantankerous and not suitable for high-speed rail. As the existing Shoreline route would be retained, it seems that something would need to be done about this bridge even if high-speed rail were removed.
I ask you to provide an opportunity for local residents to be heard in a meeting and then to reconsider this proposal which offers nothing to Old Lyme except negative consequences.
Sincerely,
Mark C. Lander

NEC DEIS Comments - RECORD #353 DETAIL

Status : [redacted]
Record Date : 1/28/2016
First Name : Mark
Last Name : Lander
Stakeholder Comments/Issues :

Bad, bad, bad, at least as far as Old Lyme CT is concerned. A third bridge across the Connecticut River? Bad!. Tracks laid through the heart of Old Lyme's officially designated historic district? Bad! Likely necessity of using I 95 for construction access? Bad! Wiping out the Old Lyme Academy College of Fine Arts along with several historic houses? Bad! This project would kill the Historic District of Old Lyme.
I am writing this as a private citizen who lived much of his life in Old Lyme, who still owns property there and who has the unique perspective on this as Co-Chair of the Old Lyme Historical Society.

NEC DEIS Comments - RECORD #1579 DETAIL

Status : [redacted]
Record Date : 2/15/2016
First Name : Ann
Last Name : Lane
Stakeholder Comments/Issues :

Alternative 1 is ridiculous. To upgrade an out of date, expensive, dilapidated railroad system in the northeast corridor by destroying historical towns because it's "cheaper" is absurd.

If the Federal government is serious about upgrading its antiquated system then do it right. I have no confidence our government can do any major capital project right and any alternative that may be chosen will be rife with cost overruns, delays and disappointing results. Just look at the Acela plan vs actuality.

I am not in favor of Alternative 1. It will destroy the fabric of our town. Where the existing tracks are in Old Lyme are not on the water and do not impact historical neighborhoods.

CT's governor is already driving corporations out of CT. Don't drive long standing residents out too. The plan is short sited and ill conceived.

Ann Lane
[redacted]
Old Lyme, CT 06371

Sent from my iPad

NEC DEIS Comments - RECORD #1262 DETAIL

Status : [redacted]

Record Date : 2/14/2016

First Name : Linda

Last Name : Lane

Stakeholder Comments/Issues :

This proposed railway would be horrific to Old Lyme. The historic district is much of what makes Old Lyme, Old Lyme. The serenity and quaintness will be destroyed. Also I feel the property value here in Old Lyme will be compromised greatly. Please do not let this happen to our beautiful town.

NEC DEIS Comments - RECORD #2976 DETAIL

Status : [redacted]

Record Date : 2/16/2016

First Name : Terri

Last Name : Lane

Stakeholder Comments/Issues :

Dear Federal Rail Administration,

I oppose Alternative 1 of the Northeast Corridor Futures proposal because it will destroy the campus of Lyme Academy College of Fine Arts of the University of New Haven.

NEC DEIS Comments - RECORD #439 DETAIL

Status : Action Completed

Record Date : 1/31/2016

First Name : Susan

Last Name : Lang

Stakeholder Comments/Issues :

This can't be! That you are considering blasting through close to our beloved First Congregational Church of Old Lyme, the most photographed and the most painted church in the US! The quiet town where artists have come for years, because the light is so unusual, no matter the time of day. Where hundreds paddle the Lt. River, enjoying the pristine scenery with rustling grasses and osprey feeding their young. The Old Lyme route is not the best alternative. It's the worst, for the character of the town, for the history of the town, for the welfare of the town. Who would want to buy close to the new railroad?

NEC DEIS Comments - RECORD #439 DETAIL

Status : Action Completed

Record Date : 1/31/2016

First Name : Susan

Last Name : Lang

Stakeholder Comments/Issues :

This can't be! That you are considering blasting through close to our beloved First Congregational Church of Old Lyme, the most photographed and the most painted church in the US! The quiet town where artists have come for years, because the light is so unusual, no matter the time of day. Where hundreds paddle the Lt. River, enjoying the pristine scenery with rustling grasses and osprey feeding their young. The Old Lyme route is not the best alternative. It's the worst, for the character of the town, for the history of the town, for the welfare of the town. Who would want to buy close to the new railroad?

NEC DEIS Comments - RECORD #1415 DETAIL

Status : Action Completed

Record Date : 2/14/2016

First Name : Chelsea

Last Name : Langley

Stakeholder Comments/Issues :

I vote No on Alternative 1. I am a resident of Old Lyme CT, Alt. 1 would affect our town in a negative manner. Building new lines through our historical district and through natural wildlife habitats would be detrimental. We've already had multiple deaths from Amtrak trains in our town, we don't want to increase this risk. Our town gets a lot of tourism from our academy and museums, the building of the lines and the lines themselves would change the existing buildings that bring in tourism and education opportunities to our town. We already have issues with summer population congesting our I-95 corridor which in turn congest our only road through town, I feel that the addition of a rail line would only increase congestion.

NEC DEIS Comments - RECORD #2550 DETAIL

Status : Pending

Record Date : 2/16/2016

First Name : Steven

Last Name : Langlois

Stakeholder Comments/Issues :

I " VEHEMENTLY I oppose Alternative 1 of the Northeast Corridor Futures proposal because it will destroy the campus of Lyme Academy College of Fine Arts of the University of New Haven."

In my opinion, Option 3 makes more sense as it provides rail access to Hartford and inland populations centers.

NEC DEIS Comments - RECORD #311 DETAIL

Status : Action Completed

Record Date : 1/27/2016

First Name : Carol

Last Name : Lansdale

Stakeholder Comments/Issues :

I am not in favor of option three for the NEC. It would be a disaster for the small Village of Garden City, NY.

NEC DEIS Comments - RECORD #1128 DETAIL

Status : [redacted]
Record Date : 2/12/2016
First Name : Michael
Last Name : Lanteri
Stakeholder Comments/Issues :

The population will be dropping in the northeast with all the baby boomers retiring and getting out of New England so why do it now? Every one I know as soon as they retire they leave Ct. I cant imagine Boston being any different. I know I am dying to leave. Our school population is even dropping in Old Lyme and we are now stuck paying for a new high school.

NEC DEIS Comments - RECORD #1109 DETAIL

Status : Action Completed

Record Date : 2/12/2016

First Name : Keri

Last Name : Lantz

Stakeholder Comments/Issues :

I am absolutely against this plan. It would devastate the town of Old Lyme in many regards. Preserving the history, charm and the business community is what this town is all about. This rail would take all of that away.

NEC DEIS Comments - RECORD #621 DETAIL

Status : Action Completed

Record Date : 2/9/2016

First Name : Jack

Last Name : LaRocca

Stakeholder Comments/Issues :

this plan would devastate a small town for the sake of saving a few minutes of time travel.....the costs of construction, environmental impact and social destruction far out weigh the current transportation that is currently in place....planners need to rethink this plan and find an alternative rather than rip through the center of our community.

NEC DEIS Comments - RECORD #1942 DETAIL

Status : [redacted]
Record Date : 2/15/2016
First Name : Katherine
Last Name : Larocca
Stakeholder Comments/Issues :

Old Lyme is a beautiful, quiet, oceanside town rich with history and timeless, picturesque beauty. American Impression began in the Lyme area because so many painters and artists flocked to capture these sunlit mashes and light-speckled forests. I strongly encourage you to reconsider the location of these traintracks and do not disturb Old Lyme with new industry and developments. I spent 4 wonderful years at Lyme Academy and my family owns a beach house along the Lyme coast. Preserve the peace, the beauty and the environment; do not build.

NEC DEIS Comments - RECORD #2592 DETAIL

Status : [redacted]

Record Date : 2/16/2016

First Name : Danielle

Last Name : Laroche

Stakeholder Comments/Issues :

"I oppose Alternative 1 of the Northeast Corridor Futures proposal because it will destroy the campus of Lyme Academy College of Fine Arts of the University of New Haven."

NEC DEIS Comments - RECORD #2585 DETAIL

Status : [redacted]
Record Date : 2/16/2016
First Name : Kevin
Last Name : Laroche
Stakeholder Comments/Issues :

Dear Federal Rail Administration,

I strongly oppose Alternative 1 of the Northeast Corridor Futures proposal. This alternative will destroy the campus of Lyme Academy College of Fine Arts of the University of New Haven.

NEC DEIS Comments - RECORD #677 DETAIL

Status : Action Completed
Record Date : 2/10/2016
First Name : Ellen
Last Name : Larsen
Stakeholder Comments/Issues :

| Ms. Carol Braegelmann
Office of Environmental Policy and Compliance
1849 C Street, NW-MS 2462-MIB
Washington D.C. 20240

RE: Tier 1 Draft Environmental Impact Statement (EIS) and Section 4(f) Assessment for NEC FUTURE, A Rail Investment Plan for the Northeast Corridor, Washington, DC, MD, |

Dear Ms. Braegelmann:

As a citizen of Maryland and a lover of our state's few remaining wild places I am writing this letter in opposition to Alternate 3 in your rail plan.

This proposal would chop off 60 acres of the Patuxent Wildlife Refuge including pristine stream, wetland, riparian and forest habitats, critical to a number of at-risk bird species. It would destroy this valuable wildlife habitat in a region of Maryland where development has taken an immense toll on natural resources, and in so doing would damage the ecological integrity of the largest remaining forest block in central Maryland—also recognized by Audubon Maryland-DC as an Important Bird Area (IBA) in 2006 because it provides habitat for several declining bird species, including Eastern whip-poor-will, wood thrush, Kentucky warbler and prairie warbler.

The Patuxent Research Refuge was established in 1973 specifically for the purpose of upholding and promulgating the Migratory Bird Conservation Act. The Act was passed to more effectively meet the U.S. migratory bird treaty obligations through the acquisition of land and water for the perpetual preservation for birds.

Allowing the proposed rail line to destroy a publicly-owned natural resource at the Patuxent Research Refuge would set a dangerous precedent for the country's most beautiful and biologically diverse landscapes. Feasible and less destructive alternatives to incising a wildlife refuge exist. Please choose an alternate that does not disturb our national treasure.

Sincerely,
ELLEN LARSEN

NEC DEIS Comments - RECORD #460 DETAIL

Status : [redacted]
Record Date : 2/1/2016
First Name : Elin
Last Name : Larson
Stakeholder Comments/Issues :

To Federal Railroad Administration,

Re: NEC Draft Plan, Alternative 1

Old Lyme is a national gem. Nature and man fashioned us to be an iconic New England shoreline town with a setting rich in beauty and culture. With sand bars at the mouth of the Connecticut River, it was never destined to be a port city, but, instead, became the home of sea captains, agriculture, and the home of American Impressionism! It would be terrible to run the railroad right through this historic village.

The map and information you provided to us so late in this process are not specific enough to actually help us understand exactly where the rail would run, so how can we respond other than in the negative?

Traffic on Route 95 in our region is always busy, but on summer weekends it is back to back cars from Exit 70 north with families heading on vacation with their cars loaded with people, belongings, dogs, and bikes. These people are not going to use the train. Widening Rt. 95 from Exit 70 on would seem to make more sense to deal with this pressing problem.

Thank you for reading this.

Sincerely,

Elin Larson
[redacted]
Old Lyme CT 06371

NEC DEIS Comments - RECORD #1240 DETAIL

Status : Pending

Record Date : 2/14/2016

First Name : Elin

Last Name : Larson

Stakeholder Comments/Issues :

Old Lyme is a national treasure. Nature and man have made it a beautiful, iconic New England coastal gem, a center of culture and historic homes. Surely we can address the transportation needs without destroying the nature of this special place.

NEC DEIS Comments - RECORD #2417 DETAIL

Status : Action Completed

Record Date : 2/15/2016

First Name : Steven

Last Name : Larson

Stakeholder Comments/Issues :

Please do not cut through the heart of Old Lyme CT and Lyme Academy with the current Amtrack expansion plan. Doing so would destroy efforts spanning the lifetimes of several generations which have made this area a unique cultural oasis.

NEC DEIS Comments - RECORD #1139 DETAIL

Status : Pending

Record Date : 2/13/2016

First Name : Jean

Last Name : Lasser

Stakeholder Comments/Issues :

This is a terrible idea that will wreck the social and economic fabric specifically of Old Lyme and will have serious negative impact on, at the very least, all the surrounding communities, if not all the communities in Connecticut along the northeast corridor. This is a textbook example of robbing Peter to pay Paul.

NEC DEIS Comments - RECORD #2562 DETAIL

Status : Pending
Record Date : 2/16/2016
First Name : Jeanne
Last Name : Latham
Stakeholder Comments/Issues :

Ms. Carol Braegelmann

Office of Environmental Policy and Compliance

1849 C Street, NW-MS 2462-MIB

Washington D.C. 20240

RE: Tier 1 Draft Environmental Impact Statement (EIS) and Section4(f) Assessment for NEC FUTURE, A Rail Investment Plan for the Northeast Corridor, Washington, DC, MD, DE, PA, NJ, NY, CT, RI,and MA

Dear Ms. Braegelmann:

The Friends of Patuxent is a 501(c)(3), non-profit organization formed in 1992 for the purpose of supporting the missions of the Patuxent Wildlife Research Center (PWRC) and the Patuxent Research Refuge (PRR). The Friends of Patuxent is the principal volunteer organization in support of the Patuxent Research Refuge and Patuxent Wildlife Research Center.

The Friends of Patuxent strongly oppose Alternate 3 in the proposal to expand and modify the Northeast Rail Corridor through this National Wildlife Refuge.

National Wildlife Refuges such as Patuxent Research Refuge are afforded the maximum level of protection of any public lands in the United States. Any plan to "take" such lands for other public purposes requires the highest level of scrutiny and complete consideration of all alternatives. Alternate 3 of the Rail Investment Plan for the Northeast Corridor would eliminate 60 acres of the Patuxent Research Refuge (PRR) including pristine stream, wetland, riparian and forest habitats which are critical to a number of at-risk bird species as well as other important wildlife species.

The refuge is a very valuable wildlife habitat in a heavily developed area. It contains the largest forest block remaining in central Maryland. As others have noted, including the Maryland Ornithological Society, the ecological integrity of this large mostly contiguous forest block is vital to many declining bird species such as Eastern whip-poor-will, wood thrush, Kentucky warbler and prairie warbler. It has also hosted Chuck-Wills-Widow, a very uncommon species in Maryland. Because is serves as a vital habitat for these species, PRR has been recognized in 2006 as an Important Bird Area (IBA).

The original Patuxent Wildlife Research Center, the only wildlife research center of its kind in the U.S., was established in 1936 to support wildlife research, and the Patuxent Research Refuge was designated as a national wildlife refuge in 1973. Patuxent Research Refuge is part of the National Wildlife Refuge system, the mission of which is "conservation, management, and where appropriate, restoration of the fish, wildlife, and plant resources and their habitats within the United States for the benefit of present and future generations of Americans." PRR has since grown to 12,841 acres.

The Friends of Patuxent do not oppose the improvement of the Northeast Rail Corridor, but we strongly oppose any alternative that would take any portion of the Research Refuge. Federal regulation requires that other alternatives be chosen in preference to the taking of national public lands of the significance of Patuxent Research Refuge. Patuxent Research Refuge, a national wildlife refuge of unparalleled value and importance, must not be compromised. The Friends of Patuxent strongly oppose selection of Alternative 3.

Sincerely,

Jeanne Latham

President, Friends of Patuxent

NEC DEIS Comments - RECORD #2697 DETAIL

Status : [redacted]

Record Date : 2/16/2016

First Name : Dan

Last Name : Laudano

Stakeholder Comments/Issues :

Dear Federal Rail Administration, I oppose Alternative 1 of the Northeast Corridor Futures proposal because it will destroy the campus of Lyme Academy College of Fine Arts of the University of New Haven.

NEC DEIS Comments - RECORD #3084 DETAIL

Status : [redacted]
Record Date : 2/17/2016
First Name : Christy
Last Name : Laurence
Stakeholder Comments/Issues :

I am NOT for the plan that wants to bring the rail system through the town of Old Lyme. We have a designated Historic District & a world class museum. This would drastically impact those two entities. Christy Laurence, Real Estate Broker, [redacted] Old Lyme, CT [redacted]

Sent from my iPhone

NEC DEIS Comments - RECORD #1905 DETAIL

Status : Pending

Record Date : 2/15/2016

First Name : John

Last Name : LaViola

Stakeholder Comments/Issues :

Dear Federal Rail Administration,

I oppose Alternative 1 of the Northeast Corridor Futures proposal because it will destroy the campus of Lyme Academy College of Fine Arts of the University of New Haven.

NEC DEIS Comments - RECORD #1631 DETAIL

Status : [redacted]
Record Date : 2/15/2016
First Name : Ken
Last Name : Lavish
Stakeholder Comments/Issues :

Ms. Carol Braegelmann
Office of Environmental Policy and Compliance
1849 C Street, NW-MS 2462-MIB
Washington D.C. 20240

RE: Tier 1 Draft Environmental Impact Statement (EIS) and Section 4(f) Assessment for NEC FUTURE, A Rail Investment Plan for the Northeast Corridor, Washington, DC, MD, DE, PA, NJ, NY, CT, RI, and MA

Dear Ms. Braegelmann:

As a citizen of Maryland, a lover of our state's few remaining wild places and a passionate and clear-eyed supporter of Patuxent Research Refuge and what it stands for I am writing this letter in opposition to Alternate 3 in your rail plan.

This proposal would chop off 60 acres of the Patuxent Wildlife Refuge including pristine stream, wetland, riparian and forest habitats, critical to a number of at-risk bird species. It would destroy this valuable wildlife habitat in a region of Maryland where development has taken an immense toll on natural resources, and in so doing would damage the ecological integrity of the largest remaining forest block in central Maryland—also recognized by Audubon Maryland-DC as an Important Bird Area (IBA) in 2006 because it provides habitat for several declining bird species, including Eastern whip-poor-will, wood thrush, Kentucky warbler and prairie warbler.

On the surface, 60 acres appears be a trivial amount. To proper value this land one must put it into perspective. In our increasingly human altered environment every unspoiled acre has an exponentially increasing value to remain as it is.

The Patuxent Research Refuge was established in 1936 specifically for the purpose of upholding and promulgating the Migratory Bird Conservation Act. The Act was passed to more effectively meet the U.S. migratory bird treaty obligations through the acquisition of land and water for the perpetual preservation for birds.

Allowing the proposed rail line to destroy a publicly-owned natural resource at the Patuxent Research Refuge would set a dangerous precedent for the country's most beautiful and biologically diverse landscapes. Feasible and less destructive alternatives to incising a wildlife refuge exist. Please choose an alternate that does not disturb a national treasure.

Sincerely,
Kenneth Lavish

NEC DEIS Comments - RECORD #2941 DETAIL

Status : Pending

Record Date : 2/16/2016

First Name : Cynthia

Last Name : Lawless

Stakeholder Comments/Issues :

This is very secretive and will possible impact the citizens of Milford and Old Saybrook with out any prior notice or environmental studies. I am sure People would like the opportunity to have more information regarding these proposals, and also more time and notice to weigh in.

NEC DEIS Comments - RECORD #1394 DETAIL

Status : [redacted]

Record Date : 2/14/2016

First Name : David

Last Name : Lawless

Stakeholder Comments/Issues :

Alternative 1 is an abomination! It would destroy Old Lyme-one of the most beautiful towns in New England. Do NOT pass Alternative 1.

NEC DEIS Comments - RECORD #1814 DETAIL

Status : Pending

Record Date : 2/15/2016

First Name : Jeanine

Last Name : Lawrence

Stakeholder Comments/Issues :

I f eel that rail service is desperately needed to alleviate our over-crowded highways, and to reduce shipping by eighteen wheel trucks that help cause highway congestion..

NEC DEIS Comments - RECORD #2761 DETAIL

Status : Action Completed

Record Date : 2/16/2016

First Name : Sarah

Last Name : Layton

Stakeholder Comments/Issues :

I strongly oppose the railway being constructed along the shoreline in Connecticut, especially through Old Lyme's historic district. I was raised in Old Lyme and after leaving for several years, I moved back to the area and now work in Old Lyme. This area is such a special and unique place with a long history, and constructing a high-speed railway through the center of it will have disastrous effects on the unique historic elements of the town, as well as the tourism that feeds this small beach town in the summer.

NEC DEIS Comments - RECORD #1503 DETAIL

Status : Pending

Record Date : 2/14/2016

First Name : Marilyn

Last Name : Lazare

Stakeholder Comments/Issues :

Old Lyme is an elegant residential community. Extending a noisy railroad through this suburban area would destroy the historic nature and atmosphere.

NEC DEIS Comments - RECORD #594 DETAIL

Status : [redacted]
Record Date : 2/8/2016
First Name : Heather
Last Name : Valudes
Stakeholder Comments/Issues :

Please accept the attached as comments on the NEC Future plan from The Lancaster Chamber of Commerce & Industry, the Economic Development Company of Lancaster and the Lancaster City Alliance.

Thanks for your consideration,

Heather Valudes
Advocacy Director
The Lancaster Chamber of Commerce & Industry
p. 717.397.3531 x 171
f. 717.293.3159
www.lancasterchamber.com<http://www.lancasterchamber.com/>

[fb]<http://www.facebook.com/LancasterChamberLCCI> [twitter] <https://twitter.com/Lanc_chamber>
[linkedin-icon-email] <http://www.linkedin.com/groups?gid=1835522&trk=hb_side_g>

Attachments : NEC Future Letter - 2.8.16.pdf (165 kb)

THE LANCASTER CHAMBER OF COMMERCE & INDUSTRY

LANCASTER COUNTY, PA
Economic Development Company

LANCASTER CITY ALLIANCE

February 8, 2016

NEC FUTURE
U.S. DOT Federal Railroad Administration
One Bowling Green, Suite 429
New York, NY 10004

RE: NEC FUTURE Planning Process, Tier 1 Draft Environmental Impact Statement

To Whom It May Concern:

The Lancaster Chamber of Commerce & Industry, the Economic Development Company of Lancaster County and the Lancaster City Alliance wish to submit joint comments on the NEC FUTURE plan.

Lancaster County's ability to connect with a highly functional rail line is critical for the success of our County and region. Year over year, ridership on the Keystone Corridor connecting Harrisburg and Lancaster to Philadelphia and New York is increasing and investment is needed to ensure future growth of intercity passenger rail.

While Lancaster is only tangentially connected to the NEC, we strongly favor a plan that supports investment in railway infrastructure, enhances connectivity, accommodates for future capacity, improves travel time, reduces environmental impacts and supports continued economic growth in the Northeast region.

Our ability to connect knowledge-based individuals to points throughout the Northeast region, through a system that is convenient and reliable positions us for further economic growth. Our organizations jointly support an action alternative that goes beyond just maintaining the role of rail. Alternative 2 and Alternative 3 that look to grow the role of rail service and transform it into the dominant choice for travel better align with our vision.

The Keystone Corridor, and Lancaster County, will be much better served by a network that is optimally effective and efficient. Investments that would better connect our more than 500,000 residents to major metropolitan regions in the northeast – from Washington, DC to Boston, and inclusive of a connection to Philadelphia International Airport – are critical for providing high-quality service to smaller markets. We are particularly interested in alternatives 2 and 3 inclusion of pulse-hub operations that would better connect the Philadelphia 30th Street Station with Intercity-Express, Metropolitan, Keystone Corridor and Atlantic City trains and provide transfer opportunities every 30 minutes during the peak period.

Lancaster County is a growing community and our employers' ability to market Lancaster as an area that can quickly and conveniently connect to the majority of the Northeast is not only good for business connections, but is essential for attracting and retaining talent in our area.

We strongly believe that now is the time to invest in the NEC in order to provide connectivity and support the Keystone Corridor's goals to enhance transit service while strengthening the communities served by the line.

Thank you for the opportunity to comment.

Sincerely,

Tom Baldrige

Thomas T. Baldrige
President & CEO
The Lancaster Chamber

Lisa Riggs
President
Economic Development Company

Robert H. Shoemaker

Bob Shoemaker
President & CEO
Lancaster City Alliance

All right. The next speaker is Sam Gold.

MR. GOLD: Good evening. I'd like to echo a number of the comments from before about the quality of this report. It's been a pleasure being involved in this process over the years.

I'm coming to you now as the Director of the Lower Connecticut River Valley Council of Governments. Previously I've been here representing a different council of governments.

The Lower Connecticut River Valley covers the 15 towns of Middlesex County, plus the towns of Lime and Old Lime. In my brief reading of this overview -- which I have not had a chance to read the whole report yet, but we will be getting written comments to you by the end of January -- there are a couple of items that I want to bring to your attention.

The first item was the exclusion of Middlesex County in the list of counties that might be impacted by environmental and cultural impacts of the proposals, particularly for the closer-in inland bypass from Old Saybrook to Rhode Island. That would necessitate construction of a new bridge. The River Cog, as we call it, is the host to the Connecticut River Gateway Commission, which is a unique commission in the state of Connecticut that has authority over viewsheds and protecting the viewsheds from the Connecticut River.

The Connecticut River has very important ecological and also cultural significance. The Florence Griswold Museum is nearly adjacent to where this new bridge could be located. That's the home of American Impressionism from the late 19th century and early 20th century. They came to Old Lime particularly because of the light and the scenery at the river. So that's something that we would be concerned about in the construction of a new bridge in that location.

Furthermore, I would like to echo concerns voiced by previous speakers about a further inland route generating sprawl along that corridor. And also I have concern of whether, based on the previous track record of Amtrak over the last 45 years being able to maintain existing facilities it has, whether they would be able to maintain in the future a new spine and major new significant infrastructures.

We currently -- my region is home to the Connecticut River Bridge, which needs to be replaced but currently does not have the funding to fully do so. So that is a bridge that is well overdue for replacement, and we currently don't have enough funding to replace it.

So my concern if a second spine is built: Would there be money to maintain this in a good state of repair when we can't maintain the current Northeast Corridor to the state

of good repair that we would like it to be maintained to?

So I will be getting you written comments by the end of January, and thank you again for coming back.

MS. SIEGEL: Thank you.

That is all the people that I have signed up to speak. Is there anybody who did not sign up who would like to speak at this time?

NEC DEIS Comments - RECORD #2183 DETAIL

Status : [redacted]

Record Date : 2/15/2016

First Name : Ryan

Last Name : Lebel

Stakeholder Comments/Issues :

Dear Federal Rail Administration,

I oppose Alternative 1 of the Northeast Corridor Futures proposal because it will destroy the campus of Lyme Academy College of Fine Arts of the University of New Haven.

NEC DEIS Comments - RECORD #499 DETAIL

Status : Action Completed

Record Date : 2/2/2016

First Name : Ted

Last Name : LeBlond

Stakeholder Comments/Issues :

More and faster Acela service please!

NEC DEIS Comments - RECORD #1555 DETAIL

Status : Pending

Record Date : 2/15/2016

First Name : Emily

Last Name : Lebovitz-Miller

Stakeholder Comments/Issues :

The proposal to route AmTrak high speed trains in the northeast corridor through Old Lyme is horrible. The center of Old lyme is a pristine village that has maintained it's serene nineteenth century character. The proposal to bring trains through the center would destroy its character. Technology and greed have destroyed much of the natural beauty of this country. The need to shave a few minutes off a train ride should not be the cause of destroying a village like Old Lyme. I would urge all who participate in this decision to visit The center of Old Lyme, stroll along Lyme street, take in the beauty of the remaining architectural gems and gardens, and listen to the birds before making a decision that could irreversibly destroy such a historic location.

NEC DEIS Comments - RECORD #2034 DETAIL

Status : Action Completed

Record Date : 2/15/2016

First Name : William

Last Name : Lechausse

Stakeholder Comments/Issues :

Dear Federal Rail Administration,

"I oppose Alternative 1 of the Northeast Corridor Futures proposal because it will destroy the campus of Lyme Academy College of Fine Arts of the University of New Haven."

NEC DEIS Comments - RECORD #837 DETAIL

Status : Action Completed

Record Date : 2/11/2016

First Name : Barton

Last Name : Lee

Stakeholder Comments/Issues :

please complete this massive project as soon as possible.

NEC DEIS Comments - RECORD #1696 DETAIL

Status : Unread
Record Date : 2/15/2016
First Name : Denise
Last Name : Lee
Stakeholder Comments/Issues :

I am hugely in favor of expanding rail service in the New England/Northeast area, as distance driving is becoming more tedious and difficult as I age. The potential for easy access to rail service in and beyond New England is extremely appealing and is definitely a quality of life issue! Sadly, though, Alternative 1 will not benefit to those of us living here in southeastern CT, especially in the Old Lyme area. In fact, our quality of life would surely decline as a result of the loss of so many of our community's assets. The geographic, geologic and historical significance of this community should merit more consideration, as should the human beings living here. There will undoubtedly be more pragmatic comments made by others than mine; but, please consider my heartfelt concerns for our quality of life.

NEC DEIS Comments - RECORD #1074 DETAIL

Status : [redacted]
Record Date : 2/12/2016
First Name : Larry
Last Name : Lee
Stakeholder Comments/Issues :

I would like to express my deep concern about the possibility of Alternative 1 actually moving forward. That plan would devastate much of the business and historic sections of Old Lyme. We don't have much to begin with and running a rail line right through the middle of it is a ludicrous idea.
Please remove Alternative from consideration.
Thank you,
Larry Lee
[redacted]
Old Lyme, CT 06371

NEC DEIS Comments - RECORD #1062 DETAIL

Status : [redacted]
Record Date : 2/12/2016
First Name : Ryan
Last Name : Lee
Stakeholder Comments/Issues :

To whom it may concern,

I was born and raised in Old Lyme, CT. I went through the incredible school system and graduated second in my class. After going off to college in Atlanta, GA and then moving to Boston, MA for work, I eventually got married and my wife and I bought our first house in Old Lyme. We lived on Coult Lane for 4 years and just recently moved to the center of town, to Library Lane.

My wife was raised in Montville, CT but always aspired to live in Old Lyme. She dreamed of living in such a beautiful town.

Old Lyme is in my blood. I left for several years but in my mid-30s, beginning to raise a family, there was no other place I would want to live. My parents can relate. My dad was born and raised in East Lyme, CT and my mother is from Massachusetts. In the early 1980's, the scraped together their savings and purchased one of the smallest, run-down houses in Old Lyme. It was what they could afford, but they wanted to live in this town and raise their children here.

Why am I telling you this? Because Old Lyme is a different kind of town. It has a special "something" that in my nearly 40 years of living I have never felt even remotely anywhere else. Our town population triples in the summertime because of our incredible shoreline communities. We're on the mouth of the CT river and we care about that. We nurture the estuaries and we have hiking trails all over town. Our residents care about being outside and enjoying where we live.

We rally together for our annual Memorial Day Parade down Lyme Street. We come together in the center of town for the annual Midsummer Festival where the best parts of our community are on display, from farm stands to local artisans and children's events at the Florence Griswold Museum to local musicians playing free outdoor concerts. The center of town is the place to be for hundreds of children on Halloween.

My wife and I just endured an incredibly strenuous home-buying process in order to move to Library Lane, which is right down the street from your proposed re-routed rail through town. This part of town has a magic to it.

We endured this stressful house purchase because we strived to be able to walk to the library. We can walk to the Chocolate Shell, which has been selling amazing candy treats since I was a young boy scraping together the change in my pockets to buy a single gummy worm. We walk to the Lymes Youth Service Bureau to bring our young son to his first classes there. We hope he will someday be an active member contributing to his community.

You can't put a price on this. This feeling, this magic, is unique to Old Lyme, and especially to this central part of our small town.

I don't have all the facts and figures about this project but I do know that the proposed railway would cut right through the middle of everything I spoke of above. And that includes the intangible sentiment of what the center of Old Lyme means to people, and has meant to our residents for hundreds of years.

Please consider other options.

Sincerely,
Ryan Lee
[redacted], Old Lyme, CT

NEC DEIS Comments - RECORD #2464 DETAIL

Status : Pending

Record Date : 2/16/2016

First Name : Peggy

Last Name : Leeson

Stakeholder Comments/Issues :

I strongly oppose the Plan me to reroute the train tracks through Old Lyme and the river and marsh area .
I would think that in light of rising sea waters a more inland route would make much more sense.

NEC DEIS Comments - RECORD #1794 DETAIL

Status : Action Completed

Record Date : 2/15/2016

First Name : marguerite

Last Name : lefurge

Stakeholder Comments/Issues :

Dear Federal Rail Administration,

"I oppose Alternative 1 of the Northeast Corridor Futures proposal because it will destroy the campus of Lyme Academy College of Fine Arts of the University of New Haven."

NEC DEIS Comments - RECORD #1537 DETAIL

Status : Pending
Record Date : 2/14/2016
First Name : Mary
Last Name : Leger
Stakeholder Comments/Issues :

NOT through the Historic District of Old Lyme. This should not even be a consideration. We protect environments of endangered species (Bald Eagles) yet disrespect human habitats - historic Old Lyme - absolutely shameful. Is the benefit (minutes gained) worth the loss of natural environment and history? Having commuted many years to Manhattan aboard MetroNorth I vote absolutely NO
to any proposal for train tracks that traverse any part of historic Old Lyme.

NEC DEIS Comments - RECORD #351 DETAIL

Status : [redacted]

Record Date : 1/28/2016

First Name : Eric

Last Name : Lehman

Stakeholder Comments/Issues :

I urge you to change your route for the high speed rail so that it does not impact the Connecticut River estuary, and does not require the Lyme Art Academy campus to be destroyed. As a historian and constant booster of Connecticut and our quality of life, I am shocked, quite frankly, that such a plan would be approved at all. Find another way.

NEC DEIS Comments - RECORD #2877 DETAIL

Status : [redacted]
Record Date : 2/16/2016
First Name : Jennifer
Last Name : Leimgruber
Stakeholder Comments/Issues :

I can't imagine a more horrible thought than destroying one of the most beautiful, vibrant, natural bits of the shoreline with yet more train infrastructure. Old Lyme is home to wild birds and other wildlife and MUST NOT be destroyed like so many other CT Shorline towns... No no no no

NEC DEIS Comments - RECORD #346 DETAIL

Status : Action Completed

Record Date : 1/28/2016

First Name : Maryclair

Last Name : Leistman

Stakeholder Comments/Issues :

I am totally against the High Speed Train Proposal "Alternative 3" that would devastate the Garden City community. Putting high speed trains through the middle of residential communities is not acceptable. It is your responsibility to inform the public of how you intend to spend our dollars on such projects and yet I have heard very little about it nor opportunities for public response hence this email.

Maryclair Leistman

Garden City, NY

NEC DEIS Comments - RECORD #2203 DETAIL

Status : [redacted]

Record Date : 2/15/2016

First Name : Jason

Last Name : Lemaire

Stakeholder Comments/Issues :

Dear Federal Rail Administration,

O oppose Alternative 1 of the Northeast Corridor Futures proposal because it will destroy the campus of Lyme Academy College of Fine Arts of the University of New Haven.

NEC DEIS Comments - RECORD #2807 DETAIL

Status : [redacted]

Record Date : 2/16/2016

First Name : Andrea

Last Name : Lender

Stakeholder Comments/Issues :

Dear Federal Rail Administration,

"I oppose Alternative 1 of the Northeast Corridor Futures proposal because it will destroy the campus of Lyme Academy College of Fine Arts of the University of New Haven."

NEC DEIS Comments - RECORD #2901 DETAIL

Status : Pending

Record Date : 2/16/2016

First Name : Margot

Last Name : Lenhart

Stakeholder Comments/Issues :

The highways and railways should be built inland, where they don't have to curve the shore, go over a dozen bridges, and are subject to flooding. Now they want to rip through the historical and cultural charm of the shore as well. Just proves once again that the state ignores the quality of life in southeastern Connecticut. Route it through Hartford.

Tom Lenhart.

MR. LENHART: Good evening, everybody. Thank you for coming out here today.

My name is Thomas Lenhart, and as a commuter to this college every day, it is apparent that there needs to be work done with these bridges and current right-of-way. Any small effect will chew up all traffic behind it. And if we go with Option No. 3, we would be glossing over those current issues altogether for just mere imagery and feasibility.

What we need to do is redo everything, get rid of the chokepoints that we currently do have. On that map, there were three chokepoints in this one section alone, indicating that there are serious problems here for on-time performance and overall speed and reliability. Now it takes just under two hours from New York to New Haven, where it used to be less than an hour and a half.

How can we create tunnels on Long Island Sound or through up-state Connecticut when we have bridges that are easily 110 years old and tunnels under New York City and through it that now have been damaged by Sandy but before that were built during the World War periods?

At this time, while No. 3 is a nice feature, I think we need to focus more on Nos. 1 and 2 at this time. Thank you.

MS. SIEGEL: Thank you very much.

NEC DEIS Comments - RECORD #1322 DETAIL

Status : [redacted]

Record Date : 2/14/2016

First Name : Patricia

Last Name : Lenihan

Stakeholder Comments/Issues :

The Tier 1 impact proposal demonstrates lack of clear thought of planning for the immediate and future impact to the town of Old Lyme and the state of Connecticut.

NEC DEIS Comments - RECORD #1742 DETAIL

Status : Pending

Record Date : 2/15/2016

First Name : Kate

Last Name : Lennard

Stakeholder Comments/Issues :

It would devalue Old Lyme beyond measure.

NEC DEIS Comments - RECORD #2553 DETAIL

Status : [redacted]
Record Date : 2/16/2016
First Name : Stacey
Last Name : Leonardo
Stakeholder Comments/Issues :

The Tier 1 Draft EIS is the worst idea I have ever heard. Old Lyme is a historic district that is an important hub for cultural events and is an area that brings tourists to the region. Let's not forget that it's an area with schools and homes that this horrible plan will adversely affect the citizens that reside and visit here.

Destroying a populated town for a train is shortsighted and a terrible idea. Whoever came up with this ridiculous plan obviously never came to the area to see the lovely town they are planning on destroying.

I highly suggest you come up with a new plan that actually makes sense, because this one should have never been considered in the first place.

NEC DEIS Comments - RECORD #88 DETAIL

Status : [redacted]

Record Date : 12/23/2015

First Name : Gene

Last Name : Little

Stakeholder Comments/Issues :

Can you please tell me the names of the "Consultants" who actually performed the Tier I Draft EIS?

NEC DEIS Comments - RECORD #831 DETAIL

Status : Action Completed

Record Date : 2/11/2016

First Name : Joan & Ken

Last Name : Levin

Stakeholder Comments/Issues :

We live in the village of Old Lyme and didn't know of the NEC FUTURE's horrific plans for our town until a few days ago. Your intention of ruining an historic village is unthinkable. Please, please consider another alternative.

NEC DEIS Comments - RECORD #437 DETAIL

Status : Action Completed

Record Date : 1/31/2016

First Name : Richard

Last Name : Levin

Stakeholder Comments/Issues :

In option three all the new tunnels to Manhattan should not go to Penn Station. Most of the traffic from NJ is commuters and they are destined for the office district further north. Thus if that major amount of construction is to be done a new station in the 50s would make much more sense. Penn Station is already crowded and even the Farley plan won't do that much to improve things. Plus this creates more redundancy if something should happen.

NEC DEIS Comments - RECORD #182 DETAIL

Status : Pending

Record Date : 1/14/2016

First Name : David

Last Name : Levitz

Stakeholder Comments/Issues :

There seems to be confusion regarding alternative 3. Most in CT, including WNPR think it's all or nothing and not an amalgam or one of the sub categories within in Alt. 3 (3.1, 3.2, 3.3, 3.4). Would it be possible to further define?

NEC DEIS Comments - RECORD #34 DETAIL

Status : [redacted]
Record Date : 12/2/2015
First Name : David
Last Name : Levitz
Stakeholder Comments/Issues :

Based on concerns voices in the media about too many stops in-between Boston and NYC, I would ask that your presentation include how NEC/FRA could accommodate non stop trains from Boston to NYC. I'm sure NEC/FRA has the answer to scheduling and performance. But I would be interesting in knowing if this is a reasonable scheduling solution...lets say the first trains leave Boston AND NYC bound for NYC AND Boston at 5:45am. More than likely these trains will be full so they will be direct. Second trains leave Boston AND NYC at 5:50 with a designated stops in Hartford. Third trains leave Boston AND NYC at 5:55am with planned stops in Worcester, Waterbury and Danbury; respectively. Or having a rail switch at station allowing for loading and unloading. Are one or both of these methods being considered and if not, what is? Hoping for Alternative 3, Sincerely, David

NEC DEIS Comments - RECORD #140 DETAIL

Status : [redacted]
Record Date : 1/12/2016
First Name : David
Last Name : Levitz
Stakeholder Comments/Issues :

Dear FRA/Communication,

We're aggressively working to build a network of landowners, developer and municipalities to connect to the proposed Hartford Station. In doing so, we plan to hep coordinate a vast network of Transit Oriented Developments throughout Hartford County.

Would it be possible to supply a map depicting where the 1,500 ft long, 900 ft wide Station would be? I understand it would be sub-terrian below the proposed Hartford Annex Station but if the FRA/NEC could further detail the positioning, that would help us immensely.

For more info on our Alliance visit: www.HartfordStation.com

Sincerely,
David Levitz
[redacted]
Hartford Business Park

NEC DEIS Comments - RECORD #2876 DETAIL

Status : [redacted]

Record Date : 2/16/2016

First Name : John

Last Name : Levonick

Stakeholder Comments/Issues :

I would like to learn more.

NEC DEIS Comments - RECORD #1912 DETAIL

Status : Pending
Record Date : 2/15/2016
First Name : Eli
Last Name : Levy
Stakeholder Comments/Issues :

Dear Federal Rail Administration,

I oppose Alternative 1 of the Northeast Corridor Futures proposal because it will destroy the campus of Lyme Academy College of Fine Arts of the University of New Haven.

NEC DEIS Comments - RECORD #277 DETAIL

Status : [redacted]

Record Date : 1/25/2016

First Name : Ann

Last Name : Lewandowski

Stakeholder Comments/Issues :

Would love to see a transit line opened from Middletown, Delaware to Newark, Dover, and Wilmington.

NEC DEIS Comments - RECORD #12 DETAIL

Status : [redacted]

Record Date : 11/12/2015

First Name : Joseph

Last Name : Lewerk

Stakeholder Comments/Issues : To whom it may concern,In regard to your current study of the environmental impact of various options for passenger rail transportation in the northeast, please let me express my belief that it would be best to pursue alternative 3 that transforms the role of rail by becoming a dominant mode choice for travel in the Northeast. Given the population density of the region and the need to maintain if not improve its environmental quality this is the best way forward especially if it is coupled with transit oriented and in-fill development. Thank you for your consideration.
Sincerely, Joseph P. Lewerk
[redacted]
5282jplewerk@[redacted]

Attachments : LewerkJoseph_Original.pdf (4 kb)

NEC DEIS Comments - RECORD #12 DETAIL

Status :	[redacted]
Record Date :	11/12/2015
First Name :	Joseph
Last Name :	Lewerk
Stakeholder Comments/Issues :	To whom it may concern,In regard to your current study of the environmental impact of various options for passenger rail transportation in the northeast, please let me express my belief that it would be best to pursue alternative 3 that transforms the role of rail by becoming a dominant mode choice for travel in the Northeast. Given the population density of the region and the need to maintain if not improve its environmental quality this is the best way forward especially if it is coupled with transit oriented and in-fill development. Thank you for your consideration. Sincerely, Joseph P. Lewerk [redacted].Lisbon, CT 06351 [redacted] 5282jplewerk@[redacted]

NEC DEIS Comments - RECORD #3056 DETAIL

Status : [redacted]

Record Date : 2/16/2016

First Name : Beverly

Last Name : Lewis

Stakeholder Comments/Issues :

Don't do it.

NEC DEIS Comments - RECORD #1940 DETAIL

Status : [redacted]

Record Date : 2/15/2016

First Name : Nathan

Last Name : Lewis

Stakeholder Comments/Issues :

I am opposed to the proposal as it will destroy the campus of Lyme Academy College of Fine Arts.

NEC DEIS Comments - RECORD #735 DETAIL

Status : [redacted]
Record Date : 2/10/2016
First Name : Orville C.
Last Name : Lewis
Stakeholder Comments/Issues :

Ms. Carol Braegelmann
Office of Environmental Policy and Compliance
1849 C Street, NW-MS 2462-MIB
Washington D.C. 20240

RE: Tier 1 Draft Environmental Impact Statement (EIS) and Section 4(f) Assessment for NEC FUTURE, A Rail Investment Plan for the Northeast Corridor, Washington, DC, MD, DE, PA, NJ, NY, CT, RI, and MA

Dear Ms. Braegelmann:

As a citizen of Maryland and a lover of our state's few remaining wild places I am writing this letter in opposition to Alternate 3 in your rail plan.

This proposal would chop off 60 acres of the Patuxent Wildlife Refuge including pristine stream, wetland, riparian and forest habitats, critical to a number of at-risk bird species. It would destroy this valuable wildlife habitat in a region of Maryland where development has taken an immense toll on natural resources, and in so doing would damage the ecological integrity of the largest remaining forest block in central Maryland—also recognized by Audubon Maryland-DC as an Important Bird Area (IBA) in 2006 because it provides habitat for several declining bird species, including Eastern whip-poor-will, wood thrush, Kentucky warbler and prairie warbler.

The Patuxent Research Refuge was established in 1973 specifically for the purpose of upholding and promulgating the Migratory Bird Conservation Act. The Act was passed to more effectively meet the U.S. migratory bird treaty obligations through the acquisition of land and water for the perpetual preservation for birds.

Allowing the proposed rail line to destroy a publicly-owned natural resource at the Patuxent Research Refuge would set a dangerous precedent for the country's most beautiful and biologically diverse landscapes. Feasible and less destructive alternatives to incising a wildlife refuge exist. Please choose an alternate that does not disturb a national treasure.

Sincerely,
Orville C. Lewis

NEC DEIS Comments - RECORD #2046 DETAIL

Status : Action Completed

Record Date : 2/15/2016

First Name : Stacey

Last Name : Lewis

Stakeholder Comments/Issues :

Dear Federal Rail Admin,

I oppose Alternative 1 of the NE Corridor Futures proposal because it will destroy the campus of the Lyme Academy College of Fine Arts of the University of New Haven.

Sincerely,

Stacey Lewis

At this point I am going to call the first speaker, James Li.

MR. LI: Yes.

THE MODERATOR: Come on up, James.

MR. LI: Yes.

THE MODERATOR: The mic is yours.

MR. LI: Good evening. My name is James Li. I'm with Community Alternatives.

I support alternate plan number one and number two. The Long Island access is not a good idea because I live near -- I live in Kew Gardens, and I have people that live in Glendale and Richmond Hill, and they go to church there and they said like a lot of diesel trains are keeping them awake overnight. So what I support is like two tunnels under the Hudson river and the additional of three to four -- track three and track four along the corridor between Boston and Washington, just increase service. That's what I support.

Thank you very much.

THE MODERATOR: Thank you very much.

MR. LI: Okay.

THE MODERATOR: Thank you, James.

MR. LI: You're welcome.

NEC DEIS Comments - RECORD #1807 DETAIL

Status : [redacted]
Record Date : 2/15/2016
First Name : Jiajuan
Last Name : Liang
Stakeholder Comments/Issues :

Dear Federal Rail Administration,

I oppose Alternative 1 of the Northeast Corridor Futures proposal because it will destroy the campus of Lyme Academy College of Fine Arts of the University of New Haven.

NEC DEIS Comments - RECORD #3012 DETAIL

Status : [redacted]

Record Date : 2/16/2016

First Name : Denise

Last Name : Liberton

Stakeholder Comments/Issues :

A strong investment to transform the NEC with alternative 3 is the best option. With increasing population growth and climate change, there is a need for more efficient rail options, especially as cities attempt to reduce car ownership. As a millennial, I already frequently travel throughout the NEC via Amtrak. Increasing the number of trains and decreasing the travel time, especially between DC/Boston, makes those trips much more feasible by rail than current options. At minimum, we need growth as incidated in alternative 2.

NEC DEIS Comments - RECORD #1759 DETAIL

Status : [redacted]
Record Date : 2/15/2016
First Name : Nicholas
Last Name : Licht
Stakeholder Comments/Issues :

Dear Federal Rail Administration,

"I oppose Alternative 1 of the Northeast Corridor Futures proposal because it will destroy the campus of Lyme Academy College of Fine Arts of the University of New Haven."

NEC DEIS Comments - RECORD #1856 DETAIL

Status : [redacted]
Record Date : 2/15/2016
First Name : John
Last Name : Lidstrom
Stakeholder Comments/Issues :

I oppose Alternative 1 of the Northeast Corridor Futures proposal because it will destroy the campus of Lyme Academy College of Fine Arts of the University of New Haven.

NEC DEIS Comments - RECORD #1481 DETAIL

Status : Action Completed

Record Date : 2/14/2016

First Name : Alexandra

Last Name : Lieberman

Stakeholder Comments/Issues :

Alternative 1 makes no sense whatsoever. Alternatives 2 and 3 have a much larger positive impact on a much larger group of people and have a much better economic development impact. All alternative 1 does is ruin a beautiful part of Connecticut. Alternatives 2 and 3 include Hartford and inject much needed connectivity to central ct.

NEC DEIS Comments - RECORD #1954 DETAIL

Status : Pending

Record Date : 2/15/2016

First Name : Laureen

Last Name : Ligon

Stakeholder Comments/Issues :

Dear Federal Rail Administration,

"I oppose Alternative 1 of the Northeast Corridor Futures proposal because it will destroy the campus of Lyme Academy College of Fine Arts of the University of New Haven."

NEC DEIS Comments - RECORD #1243 DETAIL

Status : [redacted]

Record Date : 2/14/2016

First Name : Robin

Last Name : Linares

Stakeholder Comments/Issues :

Do not do this!!

NEC DEIS Comments - RECORD #2223 DETAIL

Status : [redacted]
Record Date : 2/15/2016
First Name : Patricia
Last Name : Lincoln
Stakeholder Comments/Issues :

Please reconsider any plans to use the shorelines especially in Old Lyme for rail system proposals through the art campus.

NEC DEIS Comments - RECORD #1019 DETAIL

Status : [redacted]
Record Date : 2/12/2016
First Name : Karl
Last Name : Lindblad
Stakeholder Comments/Issues :

SUBJ: NEC Tier 1 Draft EIS

Full support for Alternative #2. Appears to be the best bang for the buck. Serious leap in service from Alt #1, with great benefits.
Alt #3 over Alt # 2 is way too costly and does not get much better speed or throughput.
Using Alt # 2 we get an improved system in today's technology plus a view to future innovations without overspending.

NEC DEIS Comments - RECORD #2234 DETAIL

Status : [redacted]

Record Date : 2/15/2016

First Name : Elizabeth

Last Name : Lindholm

Stakeholder Comments/Issues :

I am opposed to having a railroad go through the UNH satellite campus in Old Lyme, CT.

NEC DEIS Comments - RECORD #832 DETAIL

Status : [redacted]

Record Date : 2/11/2016

First Name : Thomas

Last Name : Linell

Stakeholder Comments/Issues :

The NEC should be expanded to include a Boston South Station-North Station rail link and a revival of Boston to Montreal passenger rail service, via Concord,N.H. and over the Northern Railroad to White River Junction Vermont . From W.R.J. the service would continue over existing Amtrak route.

NEC DEIS Comments - RECORD #2474 DETAIL

Status : Pending

Record Date : 2/16/2016

First Name : Karen

Last Name : Lipeika

Stakeholder Comments/Issues :

Please do not put alternative 1
Rail line in downtown Old Lyme and ruin our historical landmarks.

NEC DEIS Comments - RECORD #1389 DETAIL

Status : Unread

Record Date : 2/14/2016

First Name : Katen

Last Name : Lipp

Stakeholder Comments/Issues :

Please don't consider redirecting Amtrak through the historic area of
Old Lyme. If the contract had originally gone to UTC and the proposed turbo train that would have been made here in America instead of the electric powered Acela built in France, this would not be an issue. The views of the water would never have been impacted and the speeds of the trains would have been faster.

NEC DEIS Comments - RECORD #1389 DETAIL

Status : Unread

Record Date : 2/14/2016

First Name : Katen

Last Name : Lipp

Stakeholder Comments/Issues :

Please don't consider redirecting Amtrak through the historic area of
Old Lyme. If the contract had originally gone to UTC and the proposed turbo train that would have been made here in America instead of the electric powered Acela built in France, this would not be an issue. The views of the water would never have been impacted and the speeds of the trains would have been faster.

NEC DEIS Comments - RECORD #72 DETAIL

Status : [redacted]

Record Date : 12/15/2015

First Name : Yair

Last Name : Listokin

Stakeholder Comments/Issues :

I strongly support Alternatives 1 or 2. I think Alternative 3 is a time wasting pipe dream.

NEC DEIS Comments - RECORD #1667 DETAIL

Status : [redacted]

Record Date : 2/15/2016

First Name : John

Last Name : Listorti

Stakeholder Comments/Issues :

While I am in favor of improved rail service in the area including old Lyme, ct, I am NOT in favor of the destruction of historic buildings, etc that are part of the proposed Alternative 1.

NEC DEIS Comments - RECORD #864 DETAIL

Status : Action Completed

Record Date : 2/11/2016

First Name : David

Last Name : Littlefield

Stakeholder Comments/Issues :

Tier 1 is a bad idea! It would gut the economic district of Old Lyme and would due damage to the local environment. Also it would damage the historic district and change the culture of t town. It would destroy a town that is nearly 400 years old. Stop the stupidity. Stop the rail plan of Tier 1.

NEC DEIS Comments - RECORD #998 DETAIL

Status : [redacted]

Record Date : 2/11/2016

First Name : Helen

Last Name : Liversidge

Stakeholder Comments/Issues :

I have just read about a proposal to build a rail line along the northeast corridor between Washington and Baltimore that would take 60 acres of streams, wetlands and foresr from the Patuxent Wildlife Refuge. This would do irreparable damage to birds and other wildlife that are already struggling to survie in this heavily developed area.

Additionally, one of the daunting tasks for humans is how to keep global warming from getting out of control a d so making Planet Earth uninhabitable for humans.Places like the Patuxent Wildlife Refuge are critical to this effort. Please do not consider taking even one acre from this valuable refuge.

Sincerely,

Helen L. LiversidgeSandy Spring, Md. 20860

cc. dcurson@[redacted]

NEC DEIS Comments - RECORD #2395 DETAIL

Status : Action Completed

Record Date : 2/15/2016

First Name : Alexis

Last Name : LLanos

Stakeholder Comments/Issues :

Dear Federal Rail Administration,

"I oppose Alternative 1 of the Northeast Corridor Futures proposal because it will destroy the campus of Lyme Academy College of Fine Arts of the University of New Haven."

NEC DEIS Comments - RECORD #830 DETAIL

Status : [redacted]
Record Date : 2/11/2016
First Name : Laura
Last Name : Lofstad
Stakeholder Comments/Issues :

I strongly oppose alternative I plan which would go right though the heart of Old Lyme CT and the heart of the residents of this town. Our history and culture would be destroyed. This community has long been an important art destination and the home of American Impressionism. History and culture should be preserved at all cost. Do you really need to destroy our town for the sake of saving 30 minutes? Yes train travel is important and surely there are other alternative routes that will not destroyiour town. Look to Europe, they mange to have high speed railroads without destroying history and culture.
Thank you for considering my opinion.
Laura J. Lofstad

NEC DEIS Comments - RECORD #2366 DETAIL

Status : [redacted]
Record Date : 2/15/2016
First Name : Olwen
Last Name : Logan
Stakeholder Comments/Issues :

Although I am a huge advocate of rail travel, having grown up in Europe where we take train transportation for granted, I strongly oppose the NEC Future Alternative #1. This plan calls for the high speed rail track to cross the Connecticut River over a new bridge a little higher up the river than at present. It then travels to the center of Old Lyme bisecting Lyme Street by eliminating both the western and eastern campuses of Lyme Academy College of Fine Arts before turning north and crossing I-95. It seems that the 1817 John Sill House, currently owned by the Academy and situated on its campus, would likely be acquired by the FRA by eminent domain and then demolished.

The impact of a high-speed rail track through that sector of town would be totally devastating for our community, effectively destroying its very heart.

This plan would have horrific effects on our incredible local environment — one which has inspired artists for generations including some of the greatest impressionist painters in American history and one which is officially designated one of the "Last Great Places."

There will be untold damage to the storied structures on Lyme Street and irreplaceable buildings will either be completely destroyed or permanently scarred by this new train track construction. Many of them are either National Historic Landmarks or on the National Historic Register.

Lyme Street is the joyful, bustling hub of our little town — it has a unique personality and touches every aspect of our community life. It is home to our town hall, our public schools, our daycare, our youth services, our library, our churches, our village shops, our art college, our art association (the oldest in the country), and the Florence Griswold Museum (a national institution.) It is impossible to imagine Lyme Street with a high speed railroad running across it ...

Bearing in mind that you can already travel from London to Paris (286 miles) in 2 hours and 15 minutes, after the new track is functional, would we be able to hop on a train in Old Saybrook and be in Washington DC (334 miles) roughly two hours and 45 minutes later? No, the current travel time of six hours would be reduced by a grand total of 30 minutes to 5 hours and 30 minutes. $60 billion is an awful lot of money to spend to reduce our travel time to DC by 30 minutes.

I could continue for pages but I'll just say simply that this proposal is so terrible for Old Lyme that it is quite simply unbelievable.

I urge you to please reconsider the Alternative #1 route. Thank you.

NEC DEIS Comments - RECORD #2224 DETAIL

Status : [redacted]
Record Date : 2/15/2016
First Name : Levi
Last Name : Lomasky
Stakeholder Comments/Issues :

Rail is already heavily subsidized and there are few to no railroads that have stayed solvent, despite this tax aid. To use these subsidies to further increase the presence of expensive infrastructure, while destroying landmarks, such as the UNH art school in Old Lyme is unconscionable. Please do not undertake this project. Rail has been a financial dead end in countless countries around the world. If this project did not require subsidization and was part of a company that didn't require subsidies and would not result in terrible destruction of cultural assets, it would be another story, but, as it stands, this appears to be a fool's errand.

NEC DEIS Comments - RECORD #3017 DETAIL

Status : Unread

Record Date : 2/16/2016

First Name : A

Last Name : Long

Stakeholder Comments/Issues :

As a frequent rail traveler along the Northeast corridor, I am aware that improvements to service are certainly needed -- but not at the expense of an historic town. The proposed plan to situate expanded high speed rail lines through Old Lyme, CT must NOT be accepted.

NEC DEIS Comments - RECORD #1666 DETAIL

Status : [redacted]
Record Date : 2/15/2016
First Name : David
Last Name : Long
Stakeholder Comments/Issues :

The plan to run the railroad directly through the heart of Old Lyme,CT would destroy the town, the Art Academy, Florence Griswold Museum and many fine homes not the mention the environmental impacts. Old Lyme is a town of historic value good back to fifteen years after the Mayflower landed in the 1600's. We citizens of Old Lyme can not let this happen.

NEC DEIS Comments - RECORD #2405 DETAIL

Status : Action Completed

Record Date : 2/15/2016

First Name : Mary Louise

Last Name : Long

Stakeholder Comments/Issues :

Please do not send this rail through our history, especially the Lyme Academy.

The next speaker is Dominick Longobardi; close?

MR. LONGOBARDI: Perfect.

THE MODERATOR: Oh, you can correct it.

MR. LONGOBARDI: Thank you very much.

I appreciate that. Most people don't get it right.

Thank you.

Good afternoon and thank you so much for having this today.

My name is Dominick Longobardi. I'm a Village Trustee in the Village of Floral Park. With me is Dr. Lynn Pombonyo, (phonetic) also on our Village Board and the former Superintendent of our School District.

We'd like to submit the following comments as part of the record if we could.

The Incorporated Village of Floral Park is a 1.2 square-mile parcel located in the northwest corner of Nassau County, New York, bordering Queens, New York. The village is home to just over 16,000 residents and small business owners.

At the outset, the NEC Future Investment Plan, put forth by the Northeast Corridor by the Federal Railroad Administration, is commendable in that it will encompass both passenger and freight systems, as well as the coordination of current rail systems already in operation.

The plan addresses future goals of rail transportation within the northeast given the expectations of population and market expansion. The plan attempts to quantify the needs of an expanded population and address the movement of freight, as well as rail -- as well -- as well as from the rail perspective. While this is necessary, the plan provides three options to accomplish such tasks.

One of these options, Alternative 3, places a "two-track second spine"... "Aerial structure from Floral Park"... into a tunnel south, adjacent to Long Island Railroad Hempstead branch.

The Incorporated Village of Floral Park must vigorously object to Alternative 3 -- the Alternative 3 concept of the plan, as it would cause irreparable harm and damage to our village, both physically and financially.

This New York City-Connecticut via Long Island route will cause more harm than good, not only to the Village of Floral Park but to the densely populated areas also along -- and every Long Island community throughout which it passes.

In the absence of a formal detailed plan, and based upon basic information provided in the Draft EIS, the land needed to erect structures to carry the rail system will require loss of property within the village. That property will be residential homes, commercial properties, as available land to erect the system is non-existent. The loss of real property to residents and businesses could have a devastating effect on the future of the village, not only physically but financially as well.

In the absence of these detailed plans, construction operations near the Village's business district where Alternative 3 is contemplated, will cause major issues resulting in limited access to our local businesses. At the very least, traffic patterns can be disrupted and street access will be closed. This will have lasting effects on the business owners, as well as the viability of our business district.

If the aerial structure is to be located along the Long Island Railroad Hempstead branch, it is doubtful our business district would survive an extended construction period that would have to accompany a project such as Alternative 3.

In the absence of these detailed plans, the location of an aerial structure throughout the heart of the Village will provide for the elimination of properties, a major decrease in the remaining property values, harm to local businesses, disruption to two public grammar schools' operations, disruptions to Village operations, traffic congestion throughout the Village and safety concerns for increased traffic and crime around the structure.

In the absence of detailed plans and for these reason delineated above, the Incorporated Village of Floral Park, hereby objects to the inclusion of Alternative 3 as a viable option of the Federal Railroad Administration's NEC Future Rail Investment Plan for the Northeast Corridor, Tier 1 Draft Environmental Impact Statement.

Again, thank you so much for listening to us.

We are very, very appreciative of that.

And thank you for giving us the time to -- to let us know. I do have written copies.

THE MODERATOR: That would be great.

Thank you very much.

MR. LONGOBARDI: Thank you again.

THE MODERATOR: Thanks a lot.

NEC DEIS Comments - RECORD #2785 DETAIL

Status : [redacted]
Record Date : 2/16/2016
First Name :
Last Name : Ipombonyo
Stakeholder Comments/Issues :

NEC Future
U.S. DOT Federal Railroad Administration
One Bowling Green, Suite 429
New York, NY 10004

Dear FRA Administrator:

Attached you will find the NEC Future impact statement offered on behalf of the Incorporated Village of Floral Park, One Floral Blvd., P.O. Box 27, Floral Park, NY 11002 at the January 12, 2016 FRA public hearing held in Mineola, NY. The statement was presented by Village Trustee Dominick Longobardi with Trustee Dr. Lynn Pombonyo and a number of Floral Park residents also in attendance.

We are now taking the opportunity to offer additional public commentary:

- The Village of Floral Park is appreciative of the two-week extension of the comment period through February 16, 2016.
- The Village of Floral Park objects to the difficulty of access to details pertaining to Alternative Three: Transformation, in particular, its impact on Floral Park and the surrounding communities.
- The two January 12th public hearings in Mineola, NY were not well-publicized or well-attended in spite of the significant regional concerns regarding this project. It is important to note that 2.8 million people reside in Nassau/Suffolk Counties on Long Island, yet only two public hearings were held in central Nassau County on the same night. This would have forced most Suffolk County residents to travel twenty to ninety miles to attend the closest hearing.
- Attendees at the Mineola hearings were angered upon learning that the FRA representatives, while cordial and respectful, would not respond to questions from the audience.
- While the NEC Future website is very comprehensive, it is difficult to find specific details about the Alternative Three scope as it impacts on specific areas of Long Island. The online Mapping Atlas is difficult to read because the print is so small, and readers do not appear able to enlarge or print the maps to determine the precise paths of the projects under consideration.

We ask that you consider the attached impact statement submitted by the Incorporated Village of Floral Park as well as the serious concerns regarding communication to the public expressed herein. We are hopeful that, as further NEC Future details emerge, the FRA will use all means possible to publicize that information as well as provide greater access to informational meetings and public hearings.

Thank you.

Sincerely,

Dominick A. Longobardi, Trustee
Dr. Lynn Pombonyo, Trustee
Incorporated Village of Floral Park

Sent via the Samsung Galaxy Note® II, an AT&T 4G LTE smartphone

MAYOR
THOMAS J. TWEEDY

TRUSTEE
JAMES E. RHATIGAN

TRUSTEE
DOMINICK A. LONGOBARDI

TRUSTEE
KEVIN M. FITZGERALD

TRUSTEE
Dr. LYNN POMBONYO

VILLAGE ADMINISTRATOR
GERALD BAMBRICK, ESQ.

VILLAGE CLERK
SUSAN E. WALSH

SUPERINTENDENT PUBLIC WORKS
STEPHEN L. SIWINSKI

SUPERINTENDENT BUILDINGS
STEPHEN L. SIWINSKI

POLICE COMMISSIONER
STEVEN McALLISTER

Incorporated Village of Floral Park

ONE FLORAL BOULEVARD, P.O. BOX 27, FLORAL PARK, N.Y. 11002
TELEPHONE 516-326-6300
VILLAGE HALL FAX 516-326-2734 PUBLIC WORKS FAX 516-326-6435
WEB FPVILLAGE.ORG

Comments on the

Federal Railroad Administration

NEC Future
A Rail Investment Plan for the Northeast Corridor

Tier 1 Draft Environmental Impact Statement

The Incorporated Village of Floral Park is a 1.2 square mile parcel located in the Northwest corner of Nassau County, N.Y. bordering Queens, N.Y. The Village is home to just over 16,000 residents and small business owners.

At the outset, the NEC Future investment plan ("the Plan") put forth for the Northeast Corridor by the Federal Railroad Administration ("FRA") is commendable in that it will encompass both passenger and freight systems, as well as, the coordination of the current rail systems already in operation. The Plan addresses future goals of rail transportation within the Northeast given the expectations of population and market expansion. The Plan attempts to quantify the needs of an expanding population and address the movement of freight as well from a rail perspective. While this is necessary, the Plan provides three options to accomplish such tasks. One of these options (Alternative 3) places a "two-track second spine"… "Aerial structure from Floral Park"… "Into a tunnel south adjacent to the LIRR Hempstead Branch."

The Incorporated Village of Floral Park must vigorously object to the Alternative 3 concept of the Plan, as it would cause irreparable harm and damage to our Village both physically and financially. This New York City-Connecticut via Long Island route will cause more harm than good, not only to the Village of Floral Park, but also to every Long Island community through which it passes.

In the absence of a formal detailed plan and based upon basic information provided in the Draft EIS, the land needed to erect structures to carry the rail system will require the loss of property within the Village. That property will be residential homes and commercial properties as available land to erect the system is non-existent. The loss of real property to residents and businesses could have a devastating effect on the future of the village, not only physically, but financially as well.

In the absence of detailed plans, construction operations near the Village's business district where Alternative 3 is contemplated will cause major issues resulting in limited access to our local businesses. At the very least traffic patterns can be disrupted and street access will be closed. This will have lasting affects on the businesses owners as well as the viability of the business district. If the aerial structure is to be located along the LIRR Hempstead Branch, it is doubtful our business district would survive an extended construction period that would have to accompany a project such as Alternative 3.

In the absence of detailed plans, the location of an aerial structure throughout the heart of the Village will provide for the elimination of properties, a major decrease in remaining property values, harm to local businesses, disruption to two (2) public grammar school operations, disruption of Village operations, traffic congestion throughout the Village and safety concerns for increased traffic and crime around the structure.

In the absence of detailed plans and for the reasons delineated above, The Incorporated Village of Floral Park hereby objects to the inclusion of Alternative 3 as a viable option of the in the Federal Railroad Administration's NEC Future, A Rail Investment Plan for the Northeast Corridor, Tier 1 Draft Environmental Impact Statement.

NEC DEIS Comments - RECORD #2756 DETAIL

Status : Action Completed

Record Date : 2/16/2016

First Name : Deborah

Last Name : Loper

Stakeholder Comments/Issues :

This will destroy what families have worked a lifetime to do for their loved ones.

NEC DEIS Comments - RECORD #196 DETAIL

Status : Pending
Record Date : 1/19/2016
First Name : Andrew
Last Name : Lopez
Stakeholder Comments/Issues :

Dear Rebecca Reyes-Alicea, Department of Transportation, and Federal Railroad Administration,

I am writing to submit my public comment regarding Tier 1 Draft EIS of the NEC Future plan. I have lived and worked in New London, CT for two years, where, for political and environmental reasons, I walk to work and walk to do my shopping. I have been riding trains throughout the northeast corridor for 30 years, notably when I travelled back and forth between Philadelphia and Montreal for graduate school, and presently between New London and Philadelphia to visit friends and family as often as possible, as well as regular trips between Boston, New York, Philadelphia and New London for various reasons personal and professional.

I want my comments to resonate with those of the kind folks who attended the public hearing in Hartford on 13 January 2016, and who were good enough to submit comments for the record. I really appreciate the comments they made and I will attempt to echo them by re-emphasising a few points that are most important to me:

-

In principle, I am most interested in Alternative 3, because it concerns itself with transforming our transportation environment in the NEC, which, based on my ideas here, seems necessary.

-

It is clear that in Connecticut one is expected to have a car if you intend to get around, which is so stupid. This car culture is dangerous, environmentally backwards, and counterproductive to the prospect of leading a safe, sane, and healthy lifestyle, especially one that is concerned about climate change, keeping fossil fuels in the ground, and with the rapid expansion of alternative energies and transportation that will be crucial to the viability of our livelihoods in the unpredictable years ahead.

-

Bicycles and biking should be factored into the heart of any NEC Future plan, including guaranteeing that bicycles are welcome on all trains, long

term weather-proof bicycle parking is offered at all train stations, and bicycle lanes and routes are part of the design of any new work not just on train lines, but on roads and routes connecting or leading to train stations or other forms of public transit.

If changes or repairs need to be made to I-84, I-95, and/or any other major roadways in the years ahead, and we know they do, then this work should attempt to complement the NEC Future plan, and should similarly put bicycles, biking, and scenic pedestrianism at its heart.

As the average age of the population rises, as more individuals and families with the means to do so choose to leave the state, as weather becomes more extreme and erratic, and as we plan to scale back our reliance on fossil fuels in accordance with climate science and the recent climate agreement in Paris, options for alternative modes of transportation will become increasingly important. In order for our communities to find a way forward, regional rail together with regional bicycle routes could make Connecticut an attractive place to live and work. We should lead by example and show the nation what a transformed regional transportation system can do to revitalize communities in the age of a changing climate.

Many thanks for your consideration. I look forward to the next phase of the NEC Future plan.

Sincerely,

Andrew Lopez

[redacted]

18 January 2016

Andrew Lopez
[redacted]

Rebecca Reyes-Alicea et al.
NEC Future
U.S. DOT Federal Railroad Administration
One Bowling Green, Suite 429
New York, NY 10004

Dear Rebecca Reyes-Alicea, Department of Transportation, and Federal Railroad Administration,

I am writing to submit my public comment regarding Tier 1 Draft EIS of the NEC Future plan. I have lived and worked in New London, CT for two years, where, for political and environmental reasons, I walk to work and walk to do my shopping. I have been riding trains throughout the northeast corridor for 30 years, notably when I travelled back and forth between Philadelphia and Montreal for graduate school, and presently between New London and Philadelphia to visit friends and family as often as possible, as well as regular trips between Boston, New York, Philadelphia and New London for various reasons personal and professional.

I want my comments to resonate with those of the kind folks who attended the public hearing in Hartford on 13 January 2016, and who were good enough to submit comments for the record. I really appreciate the comments they made and I will attempt to echo them by re-emphasising a few points that are most important to me:

- In principle, I am most interested in Alternative 3, because it concerns itself with transforming our transportation environment in the NEC, which, based on my ideas here, seems necessary.
- It is clear that in Connecticut one is expected to have a car if you intend to get around, which is so stupid. This car culture is dangerous, environmentally backwards, and counterproductive to the prospect of leading a safe, sane, and healthy lifestyle, especially one that is concerned about climate change, keeping fossil fuels in the ground, and with the rapid expansion of alternative energies and transportation that will be crucial to the viability of our livelihoods in the unpredictable years ahead.
- Bicycles and biking should be factored into the heart of any NEC Future plan, including guaranteeing that bicycles are welcome on all trains, long term weather-proof bicycle parking is offered at all train stations, and bicycle lanes and routes are part of the design of any new work not just on train lines, but on roads and routes connecting or leading to train stations or other forms of public transit.
- If changes or repairs need to be made to I-84, I-95, and/or any other major roadways in the years ahead, and we know they do, then this work should attempt to complement the NEC Future plan, and should similarly put bicycles, biking, and scenic pedestrianism at its heart.

As the average age of the population rises, as more individuals and families with the means to do so choose to leave the state, as weather becomes more extreme and erratic, and as we plan to scale back our reliance on fossil fuels in accordance with climate science and the recent climate agreement in Paris, options for alternative modes of transportation will become increasingly important. In order for our communities to find a way forward, regional rail together with regional bicycle routes could make Connecticut an attractive place to live and work. We should lead by example and show the nation what a transformed regional transportation system can do to revitalize communities in the age of a changing climate.

Many thanks for your consideration. I look forward to the next phase of the NEC Future plan.

Sincerely,

Andrew Lopez

NEC DEIS Comments - RECORD #195 DETAIL

Status : [redacted]
Record Date : 1/18/2016
First Name : Andrew
Last Name : Lopez
Stakeholder Comments/Issues :

Dear Rebecca Reyes-Alicea, Department of Transportation, and Federal Railroad Administration,

I am writing to submit my public comment regarding Tier 1 Draft EIS of the NEC Future plan. I have lived and worked in New London, CT for two years, where, for political and environmental reasons, I walk to work and walk to do my shopping. I have been riding trains throughout the northeast corridor for 30 years, notably when I travelled back and forth between Philadelphia and Montreal for graduate school, and presently between New London and Philadelphia to visit friends and family as often as possible, as well as regular trips between Boston, New York, Philadelphia and New London for various reasons personal and professional.

I want my comments to resonate with those of the kind folks who attended the public hearing in Hartford on 13 January 2016, and who were good enough to submit comments for the record. I really appreciate the comments they made and I will attempt to echo them by re-emphasising a few points that are most important to me:

In principle, I am most interested in Alternative 3, because it concerns itself with transforming our transportation environment in the NEC, which, based on my ideas here, seems necessary.

It is clear that in Connecticut one is expected to have a car if you intend to get around, which is so stupid. This car culture is dangerous, environmentally backwards, and counterproductive to the prospect of leading a safe, sane, and healthy lifestyle, especially one that is concerned about climate change, keeping fossil fuels in the ground, and with the rapid expansion of alternative energies and transportation that will be crucial to the viability of our livelihoods in the unpredictable years ahead.

Bicycles and biking should be factored into the heart of any NEC Future plan, including guaranteeing that bicycles are welcome on all trains, long term weather-proof bicycle parking is offered at all train stations, and bicycle lanes and routes are part of the design of any new work not just on train lines, but on roads and routes connecting or leading to train stations or other forms of public transit.

If changes or repairs need to be made to I-84, I-95, and/or any other major roadways in the years ahead, and we know they do, then this work should attempt to complement the NEC Future plan, and should similarly put bicycles, biking, and scenic pedestrianism at its heart.

As the average age of the population rises, as more individuals and families with the means to do so choose to leave the state, as weather becomes more extreme and erratic, and as we plan to scale back our reliance on fossil fuels in accordance with climate science and the recent climate agreement in Paris, options for alternative modes of transportation will become increasingly important. In order for our communities to find a way forward, regional rail together with regional bicycle routes could make Connecticut an attractive place to live and work. We should lead by example and show the nation what a transformed regional transportation system can do to

revitalize communities in the age of a changing climate.

Many thanks for your consideration. I look forward to the next phase of the NEC Future plan.

Sincerely,

Andrew Lopez

NEC DEIS Comments - RECORD #1387 DETAIL

Status : [redacted]

Record Date : 2/14/2016

First Name : Pauline

Last Name : Lord

Stakeholder Comments/Issues :

I oppose Alternative A because of the impact to downtown Old Lyme and several important museums there.

Come on up, and since I don't have your name on the list, just make sure you give it to us clearly when you get to the mic.

MR. LOUIS: Hi. John Louis, Sierra Club Massachusetts, Greater Boston.

We have been working on aspects of this for some time now. The thing to remember is, you start -- you get on a train in Washington and it goes under the city; comes to Philadelphia, goes under the city; comes to New York, goes under the city.

You come to Boston, you know, that's it: South Station. You can enlarge South Station all you want, but it won't make any difference.

We're very, very interested in having this north-south railway be the big thing that would work that would bring us into the 21st century. Okay.

MS. SIEGEL: Thank you.

Are there any other public comments? (No response)

At this point, if there is no one else who would like to make a public statement, I'm going to close the hearing. I just will remind everybody that you're fully able to comment in any number of ways, either -- the private stenographer is available, and certainly, as we mentioned before, through e-mail, regular mail, also our website has a comment form. So we encourage everybody to comment.

We're very appreciative of you all showing up and telling us how you feel. But certainly encourage your friends and colleagues to do the same, because the FRA wants to hear what people think about NEC Future and the future of the Northeast Corridor.

Also we'll remind people that if you sign up on our website for our e-mail blast list, you'll be updated as things happen. We close the public hearing -- the public comment period at the end of January, and then there will be subsequent events after that. So you'll be able to stay in touch.

I think at this point I will close the public hearing and thank you all for your involvement and coming to this meeting. Thanks. (Applause)

(Whereupon the hearing was adjourned at 6:44 p.m.)

NEC DEIS Comments - RECORD #1576 DETAIL

Status : [redacted]
Record Date : 2/15/2016
First Name : tim
Last Name : lovejoy
Stakeholder Comments/Issues :

Dear Sirs,
I am writing to tell you that I M against Alternative 1, the adding of high speed tracks from Old Saybrook, through -- and I mean right through Old Lyme -- to New London and Mystic. What you are planning will damage some of the most beautiful part of the Connecticut Coast, and will destroy the handsome town of Old Lyme and the Lyme Academy. I agree that something has to be done about the trains in the Northeast Corridor, but i don't understand why in this day and age it all still has to be run along the coast there. Surely in the age high speed trains it would make more sense to run it through open country in Central Connecticut than through some of the most highly populated areas in New England. Besides, running the train up through Hartford would help that city tremendously. Now it is almost entirely cut off.
Sincerely,
Thomas Lovejoy
[redacted]
Hadlyme, Ct

NEC DEIS Comments - RECORD #2954 DETAIL

Status : [redacted]
Record Date : 2/16/2016
First Name : Donn
Last Name : Lowe
Stakeholder Comments/Issues :

Having been a locomotive engineer on the N.E.C. for 34yrs. I don't believe the current route to Boston can be improved on enough to make it a true high speed railroad. The ONLY way would be the most direct and straightest line from N.Y. to Boston and would more than likely require the new rails to go inland, NOT follow the shoreline. I would suggest taking a map of the northeast and draw a straight line from N.Y. directly through Ct. & R.I. to Boston. Put down a whole new railroad that can sustain speeds of 200mph. OR more , use maglev. Technology & train engineers & dispatchers to operate these trains at max. authorized speeds. Then maybe you'll have truly high speed rail. Anything else is a big boondoggle & politicians & FRA. & railroad management know that !

NEC DEIS Comments - RECORD #951 DETAIL

Status : [redacted]
Record Date : 2/11/2016
First Name : Ed
Last Name : Lowe
Stakeholder Comments/Issues :

Dear Ms. Braegelmann:

As a citizen of Maryland and a lover of our state's few remaining wild places I am writing this letter in opposition to Alternate 3 in your rail plan.

I agree with the position of the MD Audubon and others that treasure these oasis of green in our densely developed urban/suburban environments—— the Patuxent Facility is unique and should not be disturbed. Wildlife habitat is disappearing too quickly and the stress on the bird populations has already taken totals on once abundant populations of birds that count on migratory refuges such as the Patuxent Refuge.

This proposal would chop off 60 acres of the Patuxent Wildlife Refuge including pristine stream, wetland, riparian and forest habitats, critical to a number of at-risk bird species. It would destroy this valuable wildlife habitat in a region of Maryland where development has taken an immense toll on natural resources, and in so doing would damage the ecological integrity of the largest remaining forest block in central Maryland—also recognized by Audubon Maryland-DC as an Important Bird Area (IBA) in 2006 because it provides habitat for several declining bird species, including Eastern whip-poor-will, wood thrush, Kentucky warbler and prairie warbler.

The Patuxent Research Refuge was established in 1973 specifically for the purpose of upholding and promulgating the Migratory Bird Conservation Act. The Act was passed to more effectively meet the U.S. migratory bird treaty obligations through the acquisition of land and water for the perpetual preservation for birds.

Allowing the proposed rail line to destroy a publicly-owned natural resource at the Patuxent Research Refuge would set a dangerous precedent for the country's most beautiful and biologically diverse landscapes. Feasible and less destructive alternatives to incising a wildlife refuge exist. Please choose an alternate that does not disturb a national treasure.

Sincerely,

Edward T Lowe

NEC DEIS Comments - RECORD #1682 DETAIL

Status : [redacted]
Record Date : 2/15/2016
First Name : William
Last Name : Lower
Stakeholder Comments/Issues :

Thank you for the opportunity to comment on the NEC FUTURE Tier I draft Environmental Impact Statement.

We are pleased to associate our views with the letter submitted by the Wilmington Area Planning Council (WILMAPCO) of February 2, 2016. In particular, our company intends major redevelopment activity in the Town of Newport, Delaware, and the future Newport Passenger Rail Station project identified in the EIS will be critical to those redevelopment efforts to effect smart growth, environmental sustainability, and passenger rail access to both Wilmington and Philadelphia.

Respectfully submitted,

M. William (Bill) Lower
Director - Environmental & Political Affairs
Harvey, Hanna & Associates, Inc.
405 East Marsh Lane -- Suite 1
Newport, DE 19804
Phone (302) 323-9300 Ext. 11
Fax (302) 683-9306
Email wlower@harveyhanna.com<mailto:wlower@harveyhanna.com>

[cid:image001.jpg@01D167CC.9F1CF740]

NEC DEIS Comments - RECORD #1037 DETAIL

Status : Action Completed

Record Date : 2/12/2016

First Name : Heather

Last Name : Fenyk

Stakeholder Comments/Issues :

The Lower Raritan Watershed Partnership, a watershed association dedicated to the preservation, enhancement and restoration of the Raritan River and her watershed, reads with interest the NEC Future proposal to upgrade aging rail infrastructure in New Jersey. We are most specifically interested in "Tier 1 Draft EIS Alternatives" #2 and #3 which would involve expansions of the NEC outside of its current right-of-way in Central New Jersey, including the parts running through Edison and New Brunswick.

The LRWP is supportive of planning for anticipated demographic shifts that will increase regional population and demand increased rail capacity. We are likewise supportive of expanding rail capacity in general to benefit the region's economy and to increase rail ridership as a means of reducing the environmental impacts of auto transit.

However, we are especially concerned that NEC Future alternatives #2 and #3 as proposed suggest the new Corridor tracks running under Highland Park, the Raritan River and New Brunswick in a tunnel - a development which would have significant environmental impacts on the River and her habitat. We would trust that any further development of EIS or similar will involve a comprehensive habitat and environmental analysis, we trust that it will engage in participatory fashion the environmental and other stakeholders in the area, and we also expect that it will include an economic valuation of the River and River habitat and weigh this against economic benefits of the proposed rail infrastructure installation.

NEC DEIS Comments - RECORD #2422 DETAIL

Status : [redacted]

Record Date : 2/15/2016

First Name : Max

Last Name : Lu

Stakeholder Comments/Issues :

Dear Federal Rail Administration,

"I oppose Alternative 1 of the Northeast Corridor Futures proposal because it will destroy the campus of Lyme Academy College of Fine Arts of the University of New Haven."

NEC DEIS Comments - RECORD #2962 DETAIL

Status : [redacted]

Record Date : 2/16/2016

First Name : Linda

Last Name : Lubrano

Stakeholder Comments/Issues :

I oppose Alternative 1 of the NE Corridor Futures proposal because it would destroy Lyme Academy College of Fine Art.

NEC DEIS Comments - RECORD #1150 DETAIL

Status : Pending

Record Date : 2/13/2016

First Name : Daryl

Last Name : Lucas

Stakeholder Comments/Issues :

I am opposed to any rail modernization plan that destroys historical landmarks, displaces people who do not want to be displaced, or alters the character of affected towns in the process. The decision of where new lines should go belongs to the people who live on those tracts of land, not to some bureaucrat a thousand miles away. If we are going to build new rail lines in the NEC, it needs to have the blessing of those who would be sacrificing their land and homes. If it doesn't, it should not happen.

NEC DEIS Comments - RECORD #136 DETAIL

Status : Pending
Record Date : 1/11/2016
First Name : Rick
Last Name : Lucas
Stakeholder Comments/Issues :

As an avid supporter of transportation investment, I applaud the NEC future planning efforts. Considering how little investment and few improvements have been made over the better part of the last century, this plan needs to be realistic as possible, especially considering support for funding in the US senate would likely have only 34 (or less if Rhode Island is bypassed) of the 100 senators to offer support. In this day and age, it is unlikely to plan ambitious political support for what would be considered a regional project. While I understand this is a broader, future vision, let's build something achievable in the next 20 years and follow on with another effort and expanded network later. With that I offer the following comments for consideration:
1)Long Island Service – The report accurately identifies Long Island as having untapped potential for intercity service, which I agree. However, there are more effective ways to achieve this than spending $100 Billion for a tunnel, so a Boston business traveler can save 60 minutes. Far greater demand for Long Island travel exists from Upstate NY and the service plan and NEC should consider a "cross spine" from Albany to Islip (this does not require a change of direction and could theoretically be done today). This service could be an expanded "Empire Service" offering same train service from Buffalo to Islip. Additional direct trains for Islip to Washington DC could also be considered in the service plan, perhaps even a few Islip to Harrisburg trains as well.

2)Southeastern CT - The proposed relocated stop for New London and Mystic represents a huge private investment opportunity in co-locating a stop between Foxwoods and Mohegan Sun casinos. Having a direct train ride of less than 2 hours to New York City would be a great benefit to these casinos and the private investment opportunities should be explored.

3)Providence, RI - No other state (on a per capita basis) has shown its commitment to investment in rail greater than the State of Rhode Island and it would be a tremendous insult to this investment to chose a corridor that bypasses one of the busiest Amtrak stations in the system. Skipping Providence also eliminates a future meaningful airport connection at TF Green Airport as Boston Logan approaches capacity again. In addition, the existing Providence to Boston rail corridor is already one of the few high speed corridors that exists on the NEC today, carving (literally) a new approach to Boston would be an extreme waste of financial resources and political capital.

4)Southwestern CT - I find it difficult to believe that there are not more opportunities in Southwest CT to achieve greater trip reduction times. Even more drastic measures such as buying right-of-way adjacent to the corridor, buying the center tracks from ConnDOT, constructing additional station sidings (to compensate for MNRR loss of the bypass/express tracks) are all still significantly cheaper than carving a new corridor through some of the most expensive real-estate in the country. A mere 30 MPH improvement across the entire state of CT would get the Providence to New York segment near or perhaps under 2 hours, with Boston at 2 hrs 30 minutes, a comparable downtown to downtown of flying with security.

5)Hartford Spine - I understand the desire to include Hartford into the mix and believe an additional spine (perhaps using the current Acela equipment once replaced) can adequately serve this need. Existing

Washington to New York only trains can be extended to Hartford and Springfield. If there is a desire to venture outside of Alternative 1, Alternative 2, could be a true "test" for the implementation of broader alternatives in Alternative 3.

In summary, I hate to be perceived as negative as I am a huge supporter of rail, but even Alternative 1 and the modifications I have listed represent a ten-fold increase in rail investment than seen in the past 20 years and I think an overly ambitious plan of an entire new corridor across as state that has made hardly any investment in rail at all, is foolish. Let's focus on getting Alternative 1, and/or perhaps Alternative 2 in the next 20 years, which is a tall order in and of itself. These investments are all consistent with those in Alterative 3, but represent longer term objectives outside of this plan. I would much rather see money spend to expand high speed rail, rather than re-align, so someone can save 30-60 minutes on their business trip.

NEC DEIS Comments - RECORD #142 DETAIL

Status : Pending

Record Date : 1/12/2016

First Name : Rick

Last Name : Lucas

Stakeholder Comments/Issues :

Please find comments attached

As an avid supporter of transportation investment, I applaud the NEC future planning efforts. Considering how little investment and few improvements have been made over the better part of the last century, this plan needs to be realistic as possible, especially considering support for funding in the US senate would likely have only 34 (or less if Rhode Island is bypassed) of the 100 senators to offer support. In this day and age, it is unlikely to plan ambitious political support for what would be considered a regional project. While I understand this is a broader, future vision, let's build something achievable in the next 20 years and follow on with another effort and expanded network later. With that I offer the following comments for consideration:

1) Long Island Service – The report accurately identifies Long Island as having untapped potential for intercity service, which I agree. However, there are more effective ways to achieve this than spending $100 Billion for a tunnel, so a Boston business traveler can save 60 minutes. Far greater demand for Long Island travel exists from Upstate NY and the service plan and NEC should consider a "cross spine" from Albany to Islip (this does not require a change of direction and could theoretically be done today). This service could be an expanded "Empire Service" offering same train service from Buffalo to Islip. Additional direct trains for Islip to Washington DC could also be considered in the service plan, perhaps even a few Islip to Harrisburg trains as well.

2) Southeastern CT - The proposed relocated stop for New London and Mystic represents a huge private investment opportunity in co-locating a stop between Foxwoods and Mohegan Sun casinos. Having a direct train ride of less than 2 hours to New York City would be a great benefit to these casinos and the private investment opportunities should be explored.

3) Providence, RI - No other state (on a per capita basis) has shown its commitment to investment in rail greater than the State of Rhode Island and it would be a tremendous insult to this investment to chose a corridor that bypasses one of the busiest Amtrak stations in the system. Skipping Providence also eliminates a future meaningful airport connection at TF Green Airport as Boston Logan approaches capacity again. In addition, the existing Providence to Boston rail corridor is already one of the few high speed corridors that exists on the NEC today, carving (literally) a new approach to Boston would be an extreme waste of financial resources and political capital.

4) Southwestern CT - I find it difficult to believe that there are not more opportunities in Southwest CT to achieve greater trip reduction times. Even more drastic measures such as buying right-of-way adjacent to the corridor, buying the center tracks from ConnDOT, constructing additional station sidings (to compensate for MNRR loss of the bypass/express tracks) are all still significantly cheaper than carving a new corridor through some of the most expensive real-estate in the country. A mere 30 MPH improvement across the entire state of CT would get the Providence to New York segment near or perhaps under 2 hours, with Boston at 2 hrs 30 minutes, a comparable downtown to downtown of flying with security.

5) Hartford Spine - I understand the desire to include Hartford into the mix and believe an additional spine (perhaps using the current Acela equipment once replaced) can adequately serve this need. Existing Washington to New York only trains can be extended to Hartford and Springfield. If there is a desire to venture outside of Alternative 1, Alternative 2, could be a true "test" for the implementation of broader alternatives in Alternative 3.

In summary, I hate to be perceived as negative as I am a huge supporter of rail, but even Alternative 1 and the modifications I have listed represent a ten-fold increase in rail investment than seen in the past 20 years and I think an overly ambitious plan of an entire new corridor across as state that has made hardly any investment in rail at all, is foolish. Let's focus on getting Alternative 1, and/or perhaps Alternative 2 in the next 20 years, which is a tall order in and of itself. These investments are all consistent with those in Alterative 3, but represent longer term objectives outside of this plan. I would much rather see money spend to expand high speed rail, rather than re-align, so someone can save 30-60 minutes on their business trip.

Thank you for your time and consideration,

Rick Lucas
[redacted]
Cambridge, MA 02140
[redacted]
LucasR83@[redacted]

NEC DEIS Comments - RECORD #1670 DETAIL

Status : Unread

Record Date : 2/15/2016

First Name : John

Last Name : Lucashu

Stakeholder Comments/Issues :

Hi Joe,

How about using the existing interstate highways, with elevated tracks along the mediums? Also, to go to Boston, more trains can go up the Hudson and then cross over from Albany. That route already exists (at least it did years ago as the Boston & Albany, part of NYC system)

NEC DEIS Comments - RECORD #2804 DETAIL

Status : Action Completed

Record Date : 2/16/2016

First Name : James

Last Name : Luce

Stakeholder Comments/Issues :

Having grown up in Old Lyme, it would be heart breaking to have such a beautiful historical town, the birth place of American Impressionism, be carved up by a new rail system. The town would surely loose its unique character if a new rail line were to be built through the center of town.

I am against the proposal 100% and hope and pray in never happens. The transportation gains, in my opinion, are dubious, are far outweighed by the desires of the town people to preserve Old Lyme like it has always been.

NEC DEIS Comments - RECORD #1307 DETAIL

Status : Unread

Record Date : 2/14/2016

First Name : J

Last Name : Luciani

Stakeholder Comments/Issues :

Alternative 1 does not seem like it will really help us move in the right direction. This almost appears throwaway, if we ever want to move towards Alternative 3.

I oppose Alternative 1.

NEC DEIS Comments - RECORD #2624 DETAIL

Status : Action Completed

Record Date : 2/16/2016

First Name : Karen

Last Name : Ludington

Stakeholder Comments/Issues :

Dear Federal Rail Authority:

I oppose Alternative I of the Northeast Corridor Future Proposal because it will destroy the campus of Lyme Academy College of Fine Arts of the University of New Haven.

NEC DEIS Comments - RECORD #627 DETAIL

Status : Action Completed

Record Date : 2/9/2016

First Name : Townsend

Last Name : Ludington

Stakeholder Comments/Issues :

Concerning the proposal for a NEC egment that would run almost exactly through the center of Old Lyme, CT, I can see no necessity for that exact location. One should note that the location would harm a small, historic village which brings many visitors to the town and region. Please, please rethink the proposal

NEC DEIS Comments - RECORD #1194 DETAIL

Status : Pending

Record Date : 2/13/2016

First Name : Erna

Last Name : Luering

Stakeholder Comments/Issues :

I cannot believe that you would destroy a picturesque New England village that is historical in nature yet vibrant still. This is where the fine art painters of "American Impressionism" started. Plowing through an abandoned mill town is understandable, but this is ridiculous and an insult to the people who cherish this historic place for many reasons, not the least of which that it supports an active art colony and Fine Arts College to this day. This is paramount to destroying assets for no apparent reason, except for "just because I can". Please rethink your project. We MUST hold our history and the archeological importance sacred.

So just make sure you give us your name and affiliation because we don't have it written down just yet.

MS. LUKASIK: I don't have anything formally prepared so I'll just submit something over e-mail.

But I did find out about it and I just want piggyback on some of the comments that others have made.

My first name is Tanya Lukasik. I'm a resident of Nassau County.

THE STENOGRAPHER: Can you spell your last name.

THE MODERATOR: Did you get that?

MS. LUKASIK: Tonya Lukasik, L-u-k-a-s-i-k.

I'm a resident of Nassau County. I also lead a large group of about 2,000 residents throughout the county who are interested in a lot of different governmental and policy endeavors, including transparency, open data access, and have been concerned about a series of projects within Nassau County, specifically targeting freight where they've been the last to know and residents have been impacted, and where we're trying just all scrambling last minute in a scud missile kind of attack.

I found out about this via Rich a couple of days ago and informed several of my group members who are here today. It's troubling that I see that not one of my legislators are here, that the County Executive is not here. That nothing was kind posted in *Newsday* or any other kind of local media source. This is a huge project. It's unprecedented. You're talking billions of dollars worth of infrastructure and transportation improvements.

You're also kind of putting this in the lens of five other projects that are ongoing. And I think I called somebody yesterday and tried to kind of get some information on this because the EIS is extensive. I've read through a couple of other EIS' that are being proposed right now. But when you look at what's also going on in this area that has the ability to impact and is impacting, you've got GMA (phonetic) with the Port Authority. You have the Cross Harbor Freight Study with the Port Authority. You have the Regional Freight Plan with the New York Metropolitan Transit Council. You have this project, and you also have the Hudson Tunnel Gateway Project.

So you've got a series of State and federal agencies all kind of -- some are working together, some things are competing, some things might be piggybacking. I think I spoke to somebody

yesterday and they said things would be done incrementally. But when you're involving NEPA and SEQRA, you know, I get concerned about things that have happened in this county where segmentation's kind of been a key thing.

And when I look at all these different things, you know, clearly you have some residents here but not -- not like this. Not enough legislators know about this. And not a lot of State officials know about this.

When you look at the agencies that are involved, the MTA, the Port Authority, the New York Metropolitan Transit Council, the DOT, now the FRA, you've got the EPA, the DEC, to me, it seems like this should be something that we're talking about collectively altogether, not separately, not incrementally. We should be saying, you know, are a lot of these structures going to be piggybacking? What happens, you know, these tracks, is it going to be five tracks like some people have said? Is it going to be two? This is information that you have to keep organized and put into a summary forms that it's not a 1,000 page EIS that you have to read through.

I've read through the Cross Harbor Freight study plan. I mean, it's extensive and it takes hours to read through. I work with HUD. I never -- you know, when we do projects and there's RFPs, there's a strict requirement, especially using federal money that you've got to contact the community and do outreach and have have documentation about that. And I know I spoke to somebody just before and I asked, you know, how is communication about this meeting and what happened? I mean, to me it seems like it needs to be better.

So I'd like to kind of piggyback what Richard said that I do believe extending this comment period from January 30th is imperative. I think having the meeting in Suffolk makes sense. I also think having another meeting in Nassau and making sure that, you know, all the legislators are here.

The County Executive right now is under a lot of pressure for other reasons but it's not, you know, getting some other individuals at the County level. Some of the Village member -- the Village is here because we've got such a complex, elaborate government and a lot of different layers, they tend to get more notification because they've got more structure but we also have a lot of hamlets that don't have representation and those are the ones that are going to be impacted. You know,

Hicksville, for one instance, it's a huge location that I think is not being informed and there's thousands of residents there.

So when we talk about an EIS, and one gentleman had mentioned earlier, this is just a proposal, but the reality is 2017 some of this can come to fruition. And if that's the case and there's 1.3 million people in Nassau County, they should have the opportunity to kind of chime in.

Besides that, I think just more process and procedures and just education about, you know, NEPA and SEQRA. I know about it but I know a lot of people don't. People don't understand what a Tier 1 is, how it differs between federal level and state level and environmental review. And, I think, also, just the last thing I'll say to you is freight.

You know, there have been some language and terminology about freight but being real and honest about what this means. You know, the boroughs are gentrifying. The City is the economic driver. Nassau County is in financial dire straits. There's a lot of freight-based planning that's already going on right now. There's discussion of internodal facilities. How is this going to tack onto what is already going on right here?

We're seeing the impact. We're seeing the differences and changes from New York City DOT's register to have larger freight trucks into our area for the first time ever. We're seeing people getting killed by trucks that never have been here. These were accidents that never happened before. We're seeing a lot of environmental pollution. That's what the Cross Harbor Freight study said. There's going to be one area that might be impacted the most. It's for the greater good but that one area might get hit.

The area that's going to be hit, there's not enough people here that can understand that now. So I think that's it for now but I will also submit something formal afterward.

Thank you.

THE MODERATOR: Thank you, Tonya.

It looks like we have a repeat customer.

Sure. Come on up.

NEC DEIS Comments - RECORD #2856 DETAIL

Status : [redacted]

Record Date : 2/16/2016

First Name : Jan

Last Name : Lukens

Stakeholder Comments/Issues :

Please eliminate Option 1 from your consideration, as the slight improvement in travel time provided by a high speed rail in the NE sector is no justification for the destruction of the beautiful coastal village of Old Lyme which is such an important part of the history of the arts in our country.

NEC DEIS Comments - RECORD #2143 DETAIL

Status : [redacted]

Record Date : 2/15/2016

First Name : Brenda

Last Name : Luna

Stakeholder Comments/Issues :

Dear Federal Rail Administration,

"I oppose Alternative 1 of the Northeast Corridor Futures proposal because it will destroy the campus of Lyme Academy College of Fine Arts of the University of New Haven."

NEC DEIS Comments - RECORD #691 DETAIL

Status : [redacted]
Record Date : 2/10/2016
First Name : Sarah
Last Name : Luttrell
Stakeholder Comments/Issues :

Ms. Carol Braegelmann
Office of Environmental Policy and Compliance
1849 C Street, NW-MS 2462-MIB
Washington D.C. 20240

RE: Tier 1 Draft Environmental Impact Statement (EIS) and Section 4(f) Assessment for NEC FUTURE, A Rail Investment Plan for the Northeast Corridor, Washington, DC, MD, DE, PA, NJ, NY, CT, RI, and MA

Dear Ms. Braegelmann:

As a citizen of Maryland and a lover of our state's few remaining wild places I am writing this letter in opposition to Alternate 3 in your rail plan.

This proposal would chop off 60 acres of the Patuxent Wildlife Refuge including pristine stream, wetland, riparian and forest habitats, critical to a number of at-risk bird species. It would destroy this valuable wildlife habitat in a region of Maryland where development has taken an immense toll on natural resources, and in so doing would damage the ecological integrity of the largest remaining forest block in central Maryland—also recognized by Audubon Maryland-DC as an Important Bird Area (IBA) in 2006 because it provides habitat for several declining bird species, including Eastern whip-poor-will, wood thrush, Kentucky warbler and prairie warbler.

The Patuxent Research Refuge was established in 1973 specifically for the purpose of upholding and promulgating the Migratory Bird Conservation Act. The Act was passed to more effectively meet the U.S. migratory bird treaty obligations through the acquisition of land and water for the perpetual preservation for birds.

Allowing the proposed rail line to destroy a publicly-owned natural resource at the Patuxent Research Refuge would set a dangerous precedent for the country's most beautiful and biologically diverse landscapes. Feasible and less destructive alternatives to incising a wildlife refuge exist. Please choose an alternate that does not disturb a national treasure.

Sincerely,
Sarah Luttrell

PhD Candidate, Biological Sciences
[redacted]
Baltimore, MD 21250
manor.sarah@[redacted]

NEC DEIS Comments - RECORD #1331 DETAIL

Status : Unread

Record Date : 2/14/2016

First Name : Charlotte

Last Name : Lyman

Stakeholder Comments/Issues :

Alternative 1 looks like a disaster. It will cut through both the the historic and commercial districts of Old Lyme, CT, damaging wetlands along the way. I cannot understand why this proposal has been sprung on the community with so little warning.

NEC DEIS Comments - RECORD #1331 DETAIL

Status : Unread

Record Date : 2/14/2016

First Name : Charlotte

Last Name : Lyman

Stakeholder Comments/Issues :

Alternative 1 looks like a disaster. It will cut through both the the historic and commercial districts of Old Lyme, CT, damaging wetlands along the way. I cannot understand why this proposal has been sprung on the community with so little warning.

SAYBROOK POINT
INN & SPA

RE: Opposition to Alternative 1: Northeast Corridor Expansion

Dear Federal Railroad Administration officials,

On behalf of the Lyme Academy College of Fine Arts Board of Trustees, I write in opposition to the proposed NEC Futures Alternative 1 high-speed rail expansion project.

Lyme Academy College of Fine Arts was founded in 1976 and as of 2014 is a college of the University of New Haven. It is situated in Old Lyme, CT along the southern side of Interstate 95. Foremost from the institution's perspective, alternative 1 will destroy the entire campus of the Lyme Academy College of Fine Arts. The mission of Lyme Academy College of Fine Arts is to educate aspiring artists through a rigorous studio curriculum rooted in figurative and representational art, an important and unique educational mission that is embraced at only a few select institutions in the county.

Additionally, the John Sill House, 1817, located on the Lyme Academy College of Fine Arts property, and immediately in the path of the rail proposal, has been documented by both the Colonial Dames's book, "Old Houses of Connecticut," 1915, the WPA "census of old buildings in Connecticut," 1938 and again in 1985, the Historic American Buildings Survey by the National Park Service. The building would be destroyed under alternative 1.

Looking to a broader context of the proposal and the area, alternative 1 will have deleterious effects on the local environment of the CT River Estuary and Lieutenant River, both of which are in very close proximity to the Lyme Academy College of Fine Arts' campus. Alternative 1 also bisects the historic town of Old Lyme, a town that is on the National Register of Historic Places and a town that has intentionally preserved its artistic heritage, natural environmental beauty, and its historic legacy. Once disturbed by alternative 1, the preservation of these qualities will be lost forever.

Finally, from an even broader perspective, it seems that for the state of Connecticut and travelers coming to this entire region, Alternative 2 provides more flexibility and expansion of high-speed rail services to inland locations like Hartford, CT, and between Hartford and Providence, RI. The existing rail corridor along Connecticut's coastline must be preserved and upgraded but serves the local areas quite well and efficiently.

Four Diamond Award

Two Bridge Street Old Saybrook, CT 06475 (800) 243-0212 (860) 395-2000 Facsimile: (860) 388-1504
www.saybrook.com *e-mail: info@saybrook.com*

SAYBROOK POINT
INN & SPA

For these reasons, the Lyme Academy College of Fine Arts of the University of New Haven joins the chorus of opposition against NEC Futures Alternative 1.

Sincerely,

Stephen Tagliatela
Lyme Academy College of Fine Arts
Chairmain, Board of Trustees

PETITION TO: NEC FUTURE
U.S. DOT FEDERAL RAILROAD ADMINISTRATION
ONE BOWLING GREEN, SUITE 429
NEW YORK, NY 10004

STOP THE RAILROAD - SAY NO TO ALTERNATIVE ONE

SUMMARY:
Stop Alternative One from destroying the quality of life in Old Lyme. The proposed new rail lines will:

- **# Destroy homes and businesses**
- **# Damage and significantly change the Lyme Art Academy College, Lyme Art Association, Florence Griswold Museum**
- **# Negatively impact our schools, our library and a large segment of our Historic District**
- **# Forever harm and alter privately owned real estate and rights**
- **# Destroy wetlands, open space and natural resources**

WE OPPOSE NEC FUTURE STUDY, ALTERNATIVE ONE

PRINT NAME	SIGNATURE	ADDRESS	DATE
Todd Jock		84 Lyme St. Old Lyme CT 06371	2/9/16
McKenzie West		209 Mile Creek Rd Old Lyme CT 06371	2/10/16
Kristen Brady	K Brady	84 Lyme Street, Old Lyme, CT 06371	2/10/16
Martha Williams	Martha Williams	20 Stetson Rd. Griswold CT, 06351	2/10/16
Adam Brown		91 Harbor St. Branford, CT. 06405	2/10/16
Pedro Miranda	P. Miranda	283 Willetts Ave. New London CT 06320	2/10/16
Sarah Deignan		97 South Rd, Apt 2, Groton CT 06340	2/10/16
Karen Lockwood		66 Meeks Point Rd, East Hampton, CT 06424	2/10/16
Shawn Paul Michael	Paul Michael	PO Box 671, Old Lyme CT 06371	2/10/16
Karen Flynn	Karen Flynn	40 Wellsweep Dr Madison CT 06443	2/10/16
Cynthia Celone		77 Lyme St. Old Lyme, CT 06371	2/10/16
Liana Rice		77 Lyme St. Old Lyme, CT 06371	
Chris Fox		237 Wrixton Hill Haddam CT 06438	2/10/16
Forrest Joss		22 Mayflower Ave. Pawcatuck, CT 06379	2/10/16
Rochelle Tasca	Rochelle Tasca	77 Lyme st Old Lyme CT 06371	2/10/16
Whelan Podikoff		77 Lyme st Old Lyme CT 06371	2/10/16
Ellen D'Ouch Rumsey	Ellen D'Ouch Rumsey	351 Saybrook Rd, Higganum CT 06441	2/10/16
DAVID KUEHLER		114 E. WHARF, MADISON, CT 06443	2/10/16
PATRICIA CATON REARDON MD		Po Box 156 Mystic CT 06355	2/11/16
Joseph P. Sher	Joseph P. Sher	PO BOX 958 WILLIMANTIC CT 06226	2/11/16

PETITION TO: NEC FUTURE
U.S. DOT FEDERAL RAILROAD ADMINISTRATION
ONE BOWLING GREEN, SUITE 429
NEW YORK, NY 10004

STOP THE RAILROAD - SAY NO TO ALTERNATIVE ONE

SUMMARY:
Stop Alternative One from destroying the quality of life in Old Lyme. The proposed new rail lines will:

- **# Destroy homes and businesses**
- **# Damage and significantly change the Lyme Art Academy College, Lyme Art Association, Florence Griswold Museum**
- **# Negatively impact our schools, our library and a large segment of our Historic District**
- **# Forever harm and alter privately owned real estate and rights**
- **# Destroy wetlands, open space and natural resources**

WE OPPOSE NEC FUTURE STUDY, ALTERNATIVE ONE

PRINT NAME	SIGNATURE	ADDRESS	DATE
Mario Pirra	Mario Pirra	17 Basswood Dr. middletown, CT 06457	2/10/2016
Michael Vecchio	[illegible]	17 River Rd East Haven, CT 06512	2/10/2016
Adam Braun	[illegible]	91 [illegible] St [illegible] CT	2/10/16
Charles Lebraff	[illegible]	30 S. Side Bluff Haddam CT	02/10/16
Shawn Aceto	[illegible]	155 Hunt Lane East Haven CT	2/10/16
Elizabeth Oleschuk	[illegible]	170 Derby Ave Orange, CT 06477	2/10/16
Eric Sychumpunichone	[illegible]	77 Lyme st.	2/10/16
Allison Pillari	[illegible]	77 Lyme st old lyme unit F	2/10/16
Jennifer Moore	[illegible]	8426 Saltaire, Old Lyme, CT 06371	2/10/16
HANNAH MOORE	[illegible]	77 LYME ST. OLD LYME UNIT E	2/10/16
SUSAN STEPHENSON	[illegible]	84 LYME ST. OLD LYME, CT 06371	2/10/16
RANDOLPH MELICK	[illegible]	84 LYME ST. OLD LYME, CT 06371	2/10/16
Roland Becerra	[illegible]	1042 Broad ST #306 Bridgeport, CT 06604	2/10/16
Lisa Simonds	[illegible]	66 Whalehead Rd., Gale Sterry CT 06335	2/10/16
Dave Faiges	[illegible]	115 Mary Ellen Dr. Milford CT 06460	2-10-16
RICK LACEY	[illegible]	107 BLOOD ST LYME CT 06371	2-10-16
AM Szerejko	[illegible]	302 Sea Spray Rd Old Lyme	2-10-16
Donita Arrigy	[illegible]	3 Cobblefield Lane, Guilford 06437	2/10/16
Terrence Gaio	[illegible]	421 Old Main St, Rockyhill CT 06067	2/11/16
ADAM NOWAKOSKI	[illegible]	377 High Street Mystic CT 06355	2/11/16

PETITION TO: NEC FUTURE
U.S. DOT FEDERAL RAILROAD ADMINISTRATION
ONE BOWLING GREEN, SUITE 429
NEW YORK, NY 10004

STOP THE RAILROAD - SAY NO TO ALTERNATIVE ONE

UMMARY:

top Alternative One from destroying the quality of life in Old Lyme. The proposed new rail lines will:

- **# Destroy homes and businesses**
- **# Damage and significantly change the Lyme Art Academy College, Lyme Art Association, Florence Griswold Museum**
- **# Negatively impact our schools, our library and a large segment of our Historic District**
- **# Forever harm and alter privately owned real estate and rights**
- **# Destroy wetlands, open space and natural resources**

VE OPPOSE NEC FUTURE STUDY, ALTERNATIVE ONE

RINT NAME	SIGNATURE	ADDRESS	DATE
Marguerite Quigley	Marguerite Quigley	120 Blood Street, Lyme, CT 06371	2/10/16
Ivonne Quinlan	[illegible]	12 Pondside Dr, Wallingford, CT 06492	2/10/16
Zachary Haines	[illegible]	154 South Quaker Ln, West Hartford, CT 06119	2/10/16
Donna P Leake	[illegible]	3 Point Rd Old Saybrook CT 06475	2/10/16
FRITZ JELLINGHAUS	[illegible]	7 JOHNSON ROAD, CHESTER CT 06412	2/10/16

PETITION TO: NEC FUTURE
U.S. DOT FEDERAL RAILROAD ADMINISTRATION
ONE BOWLING GREEN, SUITE 429
NEW YORK, NY 10004

STOP THE RAILROAD - SAY NO TO ALTERNATIVE ONE

UMMARY:
top Alternative One from destroying the quality of life in Old Lyme. The proposed new rail lines will:

Destroy homes and businesses
Damage and significantly change the Lyme Art Academy College, Lyme Art Association, Florence Griswold Museum
Negatively impact our schools, our library and a large segment of our Historic District
Forever harm and alter privately owned real estate and rights
Destroy wetlands, open space and natural resources

VE OPPOSE NEC FUTURE STUDY, ALTERNATIVE ONE

RINT NAME	SIGNATURE	ADDRESS	DATE
heila Kinscherf	Sheila Kinscherf	77 Twilight Drive Madison, Ct	2/11/16
Kathleen Bidney	Kathleen Bidney	169 Bradley Corners Rd Madison CT	2/11/16

NEC DEIS Comments - RECORD #776 DETAIL

Status : [redacted]
Record Date : 2/10/2016
First Name : John
Last Name : Lyons
Stakeholder Comments/Issues :

Hi Amtrak,

This is short note I want to write about the future new station in Boston, MA. While the Penn Station and the rest of NEC stations are being built, I want to know when the new South Station (SS) will be constructed? Why this project SS is taking so long? it is 21 century and this station needs to be rebuilt badly. Can you give me an answer? Also, why the train is taking over 4 hours to NYC from Boston. This should be less than 3 hours! I can drive faster than that.

NEC DEIS Comments - RECORD #2159 DETAIL

Status : [redacted]

Record Date : 2/15/2016

First Name : Carole

Last Name : M

Stakeholder Comments/Issues :

Dear Federal Rail Administration,

"I oppose Alternative 1 of the Northeast Corridor Futures proposal because it will destroy the campus of Lyme Academy College of Fine Arts of the University of New Haven.

NEC DEIS Comments - RECORD #1228 DETAIL

Status : [redacted]

Record Date : 2/14/2016

First Name : m

Last Name :

Stakeholder Comments/Issues :

I vote to improve the rails we have not to add more lines in Old Lyme, CT.

NEC DEIS Comments - RECORD #1218 DETAIL

Status : [redacted]

Record Date : 2/13/2016

First Name : Michelle

Last Name : Ma

Stakeholder Comments/Issues :

Mass transit is a public good which would expand opportunities for lower class and out-of-state residents.

The Commonwealth of Massachusetts

William Francis Galvin, Secretary of the Commonwealth
Massachusetts Historical Commission

December 8, 2015

Amishi Castelli
NEC FUTURE Environmental Lead
Volpe National Transportation System Center
U.S. Department of Transportation
55 Broadway
Cambridge, MA 02142

Attn: Rebecca Reyes-Alicea

RE: Federal Railroad Administration Northeast Corridor Future Rail Project, Massachusetts. MHC #RC.52707.

Dear Ms. Castelli:

Staff of the Massachusetts Historical Commission (MHC), office of the Massachusetts State Historic Preservation Officer (SHPO), have reviewed the revised draft Programmatic Agreement (PA), and Draft Environmental Impact Statement (DEIS), received November 2 and 12, 2015 for the project referenced above.

The preliminary area of potential effect mapping provided to the MHC in DEIS Appendix A and draft PA Appendix B for portions of the project corridors in Massachusetts continue to include insufficient information for the MHC to offer comments on the proposed preliminary project area of potential effect, or recommendations for other potential interested and consulting parties in Massachusetts. The MHC looks forward to reviewing updated project mapping at a smaller scale and the FRA's determination of the project area(s) of potential effect for Massachusetts as project planning proceeds during Tier 2 projects. The MHC recommends that updated project mapping for the proposed project impact area base maps in Massachusetts utilize current MassGIS town boundaries and current aerial photographs to show existing conditions within the proposed railway corridor.

The MHC will participate in future consultation for the implementation of 36 CFR 800.4 to 6 for Tier 2 projects. As proposed in the DEIS project specific information for future Tier 2 projects will be submitted to the MHC by the involved federal agencies, and appropriate determinations and findings, including definition of areas of potential effect; and scopes for identification and evaluation efforts will be developed in consultation, to avoid, minimize or mitigate adverse effects to significant historic and archaeological resources in Massachusetts.

The MHC looks forward to reviewing the final PA that includes a revised Appendix I incorporating the following language to assist in future consultation with the MHC for conducting environmental review projects in Massachusetts:

Please delete lines 81 through 86 of Section IV and replace with the following language: Archaeological investigations, including archaeological reconnaissance surveys that may be required for portions of the project in Massachusetts shall be conducted under a State Archaeologist's permit (950 CMR 70). A State Archaeologist's permit application shall be submitted to the MHC by a qualified professional archaeologist with relevant previous experience in the region and glaciated Northeast retained by the project proponent. The State Archaeologist shall be consulted concerning an appropriate curatorial facility for all collections from field investigations conducted under permit.

220 Morrissey Boulevard, Boston, Massachusetts 02125
(617) 727-8470 • Fax: (617) 727-5128
www.sec.state.ma.us/mhc

Please also add the following paragraph to Section IV: "Within Massachusetts portions of the project impact area on non-federal lands, identified human remains shall be protected and treated consistently with the Massachusetts Unmarked Burial Law (Massachusetts General Laws, Chapter 38, § 6; Chapter 9, §§ 26A and 27C; and, Chapter 7, § 38A; all as amended). Any non-Native American human remains shall be treated in accordance with the Massachusetts Historical Commission "Policy and Guidelines for Non-Native Human Remains Which Are Over 100 Years Old or Older."

The MHC looks forward to consultation with the FRA on the continued development of the project.

These comments are offered to assist in compliance with Section 106 of the National Historic Preservation Act of 1966, as amended (36 CFR 800) and M.G.L Chapter 9, Sections 26-27C (950 CMR 70-71). If you have any questions or require additional information, please contact Jonathan K. Patton, Archaeologist/Preservation Planner, at this office.

Sincerely,

Brona Simon

Brona Simon
State Historic Preservation Officer
Executive Director
State Archaeologist
Massachusetts Historical Commission

xc: Susan Anderson, AECOM, Glen Allen, VA
Bettina Washington, Wampanoag Tribe of Gay Head (Aquinnah)
Ramona Peters, Mashpee Wampanoag Tribe
John Eddins, ACHP
Catherine Labadia, CT Historic Preservation & Museum Division
Jeff Emidy, Rhode Island Historic Preservation & Heritage Commission
David Mohler, Executive Director, Office of Transportation Planning, MADOT

NEC DEIS Comments - RECORD #214 DETAIL

Status : [redacted]

Record Date : 1/21/2016

First Name : David

Last Name : Macbride

Stakeholder Comments/Issues :

Please do as much as you can to support multi-use trails along the NEC, our future depends on it!

NEC DEIS Comments - RECORD #2067 DETAIL

Status : [redacted]

Record Date : 2/15/2016

First Name : Dorcas

Last Name : MacClintock

Stakeholder Comments/Issues :

Dear Federal Rail Administration,

As a former student of the LACFA, I strongly oppose Alternative 1 of the Northeast Corridor Futures proposal because it will destroy the campus of Lyme Academy College of Fine Arts of the University of New Haven."

NEC DEIS Comments - RECORD #2936 DETAIL

Status : [redacted]
Record Date : 2/16/2016
First Name : Karen
Last Name : MacDonald
Stakeholder Comments/Issues :

I fear this plan (Tier 1) will decimate the
Town of Old Lyme and significantly impact our shoreline neighbors. It does not take into account the cultural and economic impact to our town and its residents. I am disturbed that the plan was released with no conversation with our local officials and feel that the comment period is not sufficient for residents, businesses and environmental organizations to have time to review this huge, complex document and make an appropriate response.

NEC DEIS Comments - RECORD #719 DETAIL

Status : [redacted]

Record Date : 2/10/2016

First Name : Richard

Last Name : MacDonald

Stakeholder Comments/Issues :

I support Alternative 3. The NEC is well suited to an upgraded, rail dominant system like you might see in a small country like Belgium, Holland or Switzerland. Air travel is an increasing pain, and of no advantage in time savings. GO RAIL!!!

NEC DEIS Comments - RECORD #2858 DETAIL

Status : [redacted]

Record Date : 2/16/2016

First Name : Lauren

Last Name : Machado

Stakeholder Comments/Issues :

I oppose Alternative 1 of the Northeast Corridor Futures proposal because it will destroy the campus of Lyme Academy College of Fine Arts of the University of New Haven.

NEC DEIS Comments - RECORD #1174 DETAIL

Status : Pending

Record Date : 2/13/2016

First Name : Darlene

Last Name : Machnik

Stakeholder Comments/Issues :

We do not need or want this track through the heart of our historical town find another way!

NEC DEIS Comments - RECORD #1986 DETAIL

Status : [redacted]

Record Date : 2/15/2016

First Name : Joseph

Last Name : Machnik

Stakeholder Comments/Issues :

Dear Federal Rail Administrator: I oppose Alternative #1 of the Northeast Corridor Futures proposal because it will destroy the campus of Lyme Academy College of Fine Arts of the University of New Haven.

NEC DEIS Comments - RECORD #2627 DETAIL

Status : [redacted]

Record Date : 2/16/2016

First Name : Catherine

Last Name : Mackey

Stakeholder Comments/Issues :

As a 35 year resident of Old Lyme CT, I strongly oppose Alternative 1, which would ruin our historic small town. Also, as a frequent rider of the train, I don't believe any of these alternatives are necessary at all!! It is a waste of money!!

NEC DEIS Comments - RECORD #2647 DETAIL

Status : [redacted]

Record Date : 2/16/2016

First Name : Denise

Last Name : Mackin

Stakeholder Comments/Issues :

I oppose Alternative 1 of the Northeast Corridor Futures proposal because it will destroy the campus of Lyme Academy College of Fine Arts of the University of New Haven." Not to mention the Florence Griswold Museum. Also my daughter has been employed at the Old Lyme Inn for quite a few years. The Inn is a beautiful historic Inn. There is so much history and charm in this area there surely must be an alternative route. This plan would also greatly affect the natural balance of the estuaries and wooded areas. I HIGHLY OPPOSE this plan.

NEC DEIS Comments - RECORD #1382 DETAIL

Status : [redacted]

Record Date : 2/14/2016

First Name : Marily

Last Name : MacKinnon

Stakeholder Comments/Issues :

i am vehemently opposed to the proposed rail line through the midfle of bucolic Old Lyme. There has to be a way to use existing rail corridors to get a hi speed rail dine without destrying our towns.

NEC DEIS Comments - RECORD #1767 DETAIL

Status : [redacted]

Record Date : 2/15/2016

First Name : Akash

Last Name : Madappanahalli

Stakeholder Comments/Issues :

Dear Federal Rail Administration,

"I oppose Alternative 1 of the Northeast Corridor Futures proposal because it will destroy the campus of Lyme Academy College of Fine Arts of the University of New Haven."

NEC DEIS Comments : RECORD #992 DETAIL

Status : [redacted]

Record Date : 2/11/2016

First Name : Erik

Last Name : Madsen

Stakeholder Comments/Issues :

High speed rail lines are more than just solutions to congestion in transportation. We should fully appreciate the other intrinsic benefits of high speed rail to a civilization. High speed rail systems are:

-Iconic of the identity of the place
-A point of pride of the place
-Symbolic of having future vision
-Representative of complex collaboration of government and industry
-Indicative of economic solvency
-Evidence of a vision to plan for the future
-Anticipatory of an increase in transportation demand
-Able to concentrate development around transit stations
-Raising real estate values
-Cosmopolitan
-Freeing people's commute time to do other things than drive
-Likely to attract individuals and businesses to locate in the region
-Likely to motivate individuals and businesses to stay in the region
-A safer means of transportation
-A less costly means of transportation
-A less polluting means of transportation
-Faster than automobile travel

These intrinsic benefits of high speed rail can have a net economic value much higher than the cost of the project itself. Does anyone think the Japanese Bullet train was a novelty in 1964? Who bemoans the ease and speed one can move about the EU? Could China, Taiwan, South Korea, Sweden, and Turkey all be misguided?

The USA should have embraced high speed rail decades ago. The consequences of not doing so are:
-An economy hobbled by poor transportation.
-Higher prices for goods and services
-The exodus of people and industry from urban centers due to a lack of infrastructure
-Investments in road infrastructure that never relieve congestion
-Attempts to brand buses as a superior alternative to rail

Yes high speed rail is expensive. Urban areas pose complex challenges for new projects. Planning will take years. Many years will be needed for construction. So be it, let's get started. Politicians must concentrate on having a vision for the future and act on that vision today. This is the most powerful and technologically advanced country in the world that deserves to have a transportation system it can be proud of.

NEC DEIS Comments - RECORD #2012 DETAIL

Status : [redacted]

Record Date : 2/15/2016

First Name : Janet

Last Name : Maffucci

Stakeholder Comments/Issues :

Dear Federal Rail Administration,

"I oppose Alternative 1 of the Northeast Corridor Futures proposal because it will destroy the campus of Lyme Academy College of Fine Arts of the University of New Haven."

NEC DEIS Comments - RECORD #2177 DETAIL

Status : [redacted]

Record Date : 2/15/2016

First Name : Guillermo

Last Name : Mager

Stakeholder Comments/Issues :

Dear Federal Rail Administration,

"I oppose Alternative 1 of the Northeast Corridor Futures proposal because it will destroy the campus of Lyme Academy College of Fine Arts of the University of New Haven."

NEC DEIS Comments - RECORD #3002 DETAIL

Status : [redacted]

Record Date : 2/16/2016

First Name : John

Last Name : Mager

Stakeholder Comments/Issues :

I am vehemently opposed to this extraordinary expenditure of tax payer dollars that will destroy the character and economy of many New England towns with very little return. People who commut can put up with the current time it takes to travel from Boston to Washington. If they need to get there quicker (and very few people actually have to) there are planes to serve that need quite economically. Improve the existing tracks and rights of way. Abandon this costly folly.

NEC DEIS Comments - RECORD #757 DETAIL

Status : [redacted]
Record Date : 2/10/2016
First Name : Tom
Last Name : Wagner
Stakeholder Comments/Issues :

NEC FUTURE

U.S. DOT Federal Railroad Administration

One Bowling Green, Suite 429

New York, NY 10004

Subject: Comments on the long-term vision and investment program for the North East Corridor (NEC).

Reference: Objective of the FRA NEC FUTURE PROGRAM

Dear Colleagues:

Attached please find two documents that provide our detailed comments pertaining to the NEC FUTURE Tier 1 Draft Environmental Impact Statement (Tier 1 Draft EIS). We look forward to your reviewing these carefully prepared comments and an accompanying presentation slide deck as part of your comprehensive assessment of public commentary. We respectfully believe our enclosures add great value to your decision making regarding the "Preferred Alternative for NEC FUTURE".

Should your research team have any questions concerning the attachments, please do not hesitate to contact us directly:

Mr. Tom Wagner

President

Maglev 2000, Incorporated

1278 Glenneyre Street, #90

Laguna Beach, California 92651

Email: tomwagner@cox.net

Thank you for this important opportunity to comment on one of our nation's most impactful rail initiatives.

The Maglev 2000 Inc. Team

Attachments :

Comments on NEC EIS Part 1 (Final 10Feb2016).pdf (1 mb)
Future US Surface Transportation System Vision (Final 10Feb2016).pdf (3 mb)

10 February, 2016 via E-Mail

NEC FUTURE
U.S. DOT Federal Railroad Administration
One Bowling Green, Suite 429
New York, NY 10004

Subject: Comments on the long-term vision and investment program for the North East Corridor (NEC).

Reference: Objective of the FRA NEC FUTURE PROGRAM

Through the NEC FUTURE program, the FRA will determine a long-term vision and investment program for the NEC, and provide a Tier 1 Environmental Impact Statement (EIS)and Service Development Plan (SDP) in 2016 in support of that vision.

A National Maglev Network for Passengers and Freight is the Next Logical Step in Trying to Create a Better, Brighter, more Sustainable and Economically Sound Future for the people of the United States

The public interest of the United States would be better served if the FRA would include in its long-term vision and investment program for the NEC (North East Corridor), a plan to evolve the national transportation system to include the new 2nd generation superconducting Magnetic Levitation (Maglev) transport technology invented by Drs. James Powell and Gordon Danby and developed by Maglev 2000, Inc. The unique capabilities and versatility of the Maglev 2000 transport system better meets the energy efficiency, sustainable energy, and economic requirements for a 21st Century national high-speed transport network. Its low-cost guideway construction, operating and maintenance can reduce congestion, health harming and greenhouse gas emissions on US highways by offering passenger fares and freight shipping costs cheaper than highway driving and trucking and would persuade drivers to leave their cars and trucking companies to ship goods on the 300 mph service.

The Need for Full and Open Competition on a Level Playing Field

The Competition in Contracting Act (CICA) of 1984 generally governs competition in federal procurement contracting. Any procurement contract not entered into through the use of procurement procedures expressly authorized by a particular statute is subject to CICA. CICA requires that contracts be entered into after "full and open competition through the use of competitive procedures" unless certain circumstances exist that would permit agencies to use noncompetitive procedures. However, full and fair competition can be undermined if FRA does not set requirements for procurement that are in the national interest.

Full and open competition means that the FRA should not stack the deck against domestic providers competed against foreign government subsidized trains. Full and open competition is based on a level playing field that is not upset by foreign government destruction of domestic private sector suppliers based on foreign government subsidization of proffered trains. Private sector competition against foreign government subsidized goods is not fair trade. Rather it is government action that destroys a domestic private sector in favor of a foreign government takeover of that goods and services sector.

As important, the FRA should develop a package of bidding requirements based on a next generation train system that minimizes or eliminates the need for continuing public sector subsidy for operations once the new trains are in service. The FRA does not have to pre-judge this, but it should make this one criterion a very high rating factor in evaluation of bids for next gen trains. A self-sustaining combination passenger and freight system should be one of

Tom Wagner, President, Maglev 2000, Inc. 1278 Glenneyre Street, #90, Laguna Beach, California 92651 email: tomwagner@cox.net

the foremost goals of the next gen train system. This goal can be accomplished if the FRA will make it a requirement and high point for evaluation.

Another factor for planning should be to increase safety, speed and operability on existing or modified train tracks. A next generation train system that could leverage the rights-of-way of existing track, sharing the bed with traditional trains would maximize the economic return to existing infrastructure while providing for speedier and safer passenger service. 300 MPH trains on segments of existing train beds as well as rights-of-ways of national highways are possible but only if the FRA points to speed and capability to use existing rights-of-way as an important factor and final cost recovery potential in bid evaluation.

The idea for using the existing rights-of-ways, whenever possible, was proposed by the Senate Environment and Public Works Committee, Chaired by the late Senator Patrick Moynihan of NY. Senator Harry Reid said that he proposed the idea to the committee as a new member of the committee. Using existing rights-of-way would save a large amount of the costs of a national Maglev system. About 90% of the costs of a new high-speed network is the cost of the guideway structure and a major portion of that cost is the land acquisition for the guideway. It is an elegant solution to the increasingly and harmful traffic congestion on the roadways that access our high population density areas.

A NATIONAL SC MAGLEV NETWORK AWAITS GOVERNMENT INVESTMENT IN A MAGLEV TEST FACILITY SIMILAR TO THAT OF JAPAN AND GERMANY.

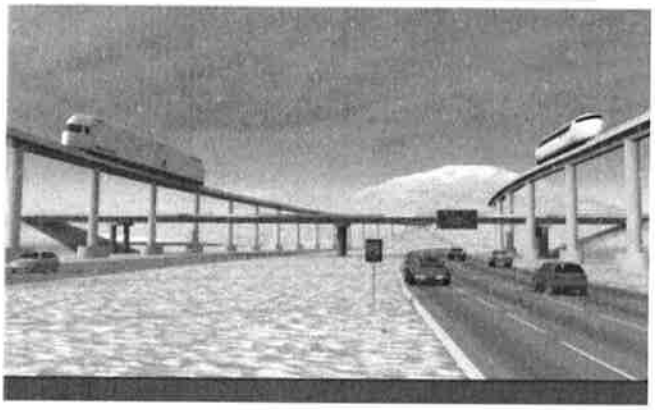

Specifically, Maglev 2000's advanced surface Maglev transport is a very energy efficient, no rolling friction, all-electric powered, wheel less transport, which operates by levitating and propelling vehicles using common aluminum coils, encapsulated in polymer concrete panels. These panels are attached to a concrete monorail guideway, as shown here, or they can also be mounted on conventional railroad trackage. These panels inductively interact with superconducting magnets on board the vehicle to create a powerful repelling levitating force that will not let the vehicle touch the guideway or tracks. This system eliminates energy consuming rolling friction and potential derailment hazards caused by rail spreading and rail embrittleling anvil effect of steel wheels on steel rails. By transmitting AC electric current through a set of panels along the guideway, the levitated Maglev 2000 vehicle is propelled, its speed controlled by the frequency of the AC current. To increase speed, a control center increases the AC frequency, to decrease speed, the control center AC frequency is decreased. The distance between Maglev 2000 vehicles on the guideway automatically remains constant, even if the individual vehicles experience head or tail winds, and climb or descend grades. The kinetic energy of the moving vehicles is fed back into the electrical grid when they slow down and stop.

The Maglev 2000 system eliminates the need for a pantograph/catenary electric power system and contributes significantly to reducing maintenance and energy costs and weather related power outages. Maglev 2000's very powerful magnets are capable of propelling passenger vehicles and fully-loaded highway freight trucks in roll-on, roll-off Maglev vehicles at 300 mph average speed, limited only by air drag. It is a quiet, neighborhood friendly train without the familiar high-decibel "clickety-clack" sound. Its intercity freight truck and automobile-carrying transport vehicles can become the 21st Century national logistics and passenger system. Maglev 2000 equipment could evolve Amtrak to a much lower fare, much faster, more convenient passenger service that would persuade drivers to leave their cars and ride Amtrak in fast, quiet, smooth comfort similar to being in the passenger's favorite living room chair.

The following figure give a visual comparison of modern propulsion options for guided surface transport systems. The drawing illustrates the types available. The top row of Superconducting Maglev vehicles shows the M-2000 equipment that is the 2nd generation superconducting system first invented in 1966 by Drs. James Powell and Gordon Danby and developed by Japan Railway (JR), a passenger train, that uses their 1st generation **repelling force** superconducting Maglev design and currently holds the World Speed Record for trains achieving 581 km/h

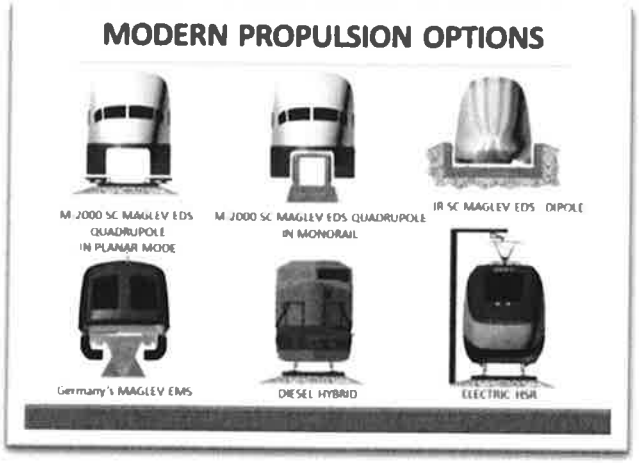

(361 mph) set by a JR Central MLX01 maglev train in December 2003 at JR's Yamanashi Test Facility. The bottom row shows Germany's Maglev which uses less efficient standard electromagnets and the **attractive** magnetic force unlike the repelling force system of Powell and Danby. The German system is the first in commercial service at Shanghai, Japan. This YouTube link may help the reader of this comment on the NEC understand Maglev-2000's evolution and unique capabilities. https://youtu.be/ifa5d0PquuU

Using the repelling force rather than the attractive force offers a "gap advantage" of about 4 inches. This bigger gap translates into an economic advantage in that the construction tolerance is cheaper to construct and more seismic tolerant. Also, the repelling force Maglev 2000 levitation system is inherently stable ensuring automatic stability. The attractive force electromagnet system is inherently unstable, requiring that servo control of the magnet current on the vehicle to prevent crashes. The diesel hybrid is becoming the workhorse of railroad freight and the all-electric HSPR is similar to the Amtrak's Acela or France's TGV.

Since the introduction of all-electric passenger trains in Europe, China and Japan, it has been learned that the operating and maintenance costs of the high-speed steel-wheel-on-steel tracks systems are expensive and competitive passenger fares cannot recover the cost of operations, maintenance, and amortization of construction and therefore the service must be subsidized by taxpayers. According to studies by the GAO and others there are only a few routes in the World that operate in the black. The popular Amtrak service between Boston and Washington, the so-called NEC, serves America's most densely populated corridor, and it cannot recover its

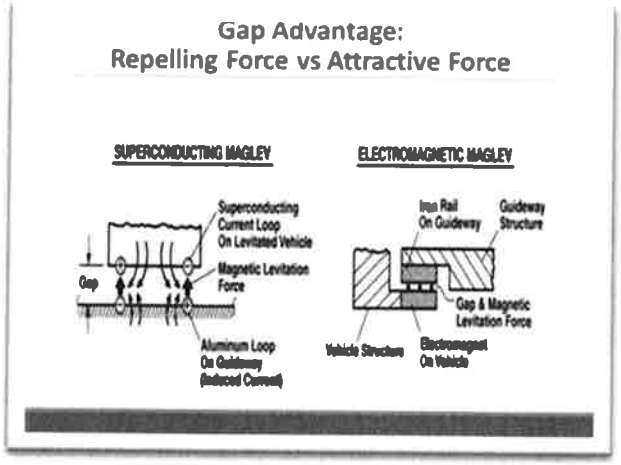

operating, maintenance, and construction costs.

Because of the subsidy requirement, there will be only a very small role for electrically powered High Speed Passenger Rail (HSPR). Electrically powered conventional rail will still play a role in the transport of bulk freight, etc., grain, cement, etc., but HSPR's role will be virtually zero. This is because HSPR only carries passengers, is inherently very expensive, and must be heavily subsidized by government.

Even in countries that possess excellent HSPR systems, like France and Japan, the per capita travel on HSPR is small compared to other transport modes. For example, in France, per capita, the French travel on HSPR 400 miles, annually, and drive 7,600 miles. In Japan, per capita, they travel 400 miles on HSPR and drive 4,000 miles.

In America, per capita, we travel more than 10,000 miles per year by automobile, 2,750 miles by air, and 18 miles per year by Amtrak. Clearly, building HSPR in the U.S. would increase rail travel. However, because America is much bigger than countries like France and Japan and has much lower population densities (80 per square mile in the U.S. versus 871 in Japan, and 288 in France). HSPR travel in America would be considerably smaller than the 400 miles per year in France and Japan. Probably less than 100 miles per capita per year.

In contrast, Maglev 2000 can provide essentially intercity travel in the U.S. for passengers, autos, trucks, and containerized high value freight, without oil and greenhouse gas emissions, at higher speeds and lower cost than existing transport systems, while saving many thousands of lives and serious injuries annually.

America has failed to aggressively implement Maglev despite its many benefits because it has been opposed by other transport interests and the Federal system. For example, in 2009, the Maglev 2000 system's proposal was precluded from participation because it was determined by FRA to be "ineligible" because the grant program required a State, State Consortium, or Amtrak endorsement to fund a test and certification program. Maglev 2000 could not persuade the State of NY to sponsor the proposal, and a request was also made to the newly appointed Amtrak Chairman, who said he would take a look at it, but Maglev 2000 did not get a response. We were told that our proposal was excellent but the law required State sponsorship. We sent a waiver request to the White House and DOT but did not receive a response.

Maglev is not a futuristic fantasy. Japanese and German governments have both funded development of 1st generation passenger Maglev systems that have carried many thousands of passengers and total run distances of hundreds of thousands of miles. The Japanese Superconducting Maglev system, based on the 1966 inventions of Powell and Danby is now operating in Yamanashi, Japan. Japan plans to extend their present system to become a 300-mile-long, 300 mph Maglev route between Tokyo and Osaka, which will carry 100,000 passengers daily. Japan has offered to demonstrate their system in Japan between Baltimore and Washington, DC and the State of Maryland has received a $26 million planning grant from DOT to support their planning with Japan.

The principal factors holding back implementation of the 1st generation Maglev systems like JR's 1st Generation system in America is their high construction cost, on the order of 60 million dollars per two-way mile, their limitation to passenger only transport, their incompatibility with existing rail and their switching limitations. To switch JR's Maglev to off-the-main-line stations requires the mechanical movement of a massive concrete switch. The Maglev train must slow and the switching is cumbersome.

Realizing this, Powell and Danby have improved their original 1966 inventions to incorporate important capabilities including:

- Much lower construction cost for the Maglev guideway.
- Capability to carry high revenue highway trucks, personal autos, and freight containers, in addition to passengers.
- Capability for levitated travel along existing railroad tracks, which have been adapted for Maglev at very low cost.
- Capability to electronically switch at high-speed off the main line to off-line stations for unloading/loading operations.
- Capability to be privately financed without government subsidies for construction and operation
- Capability to use new high temperature superconductors and much cheaper nitrogen as the refrigerant for super cooling the magnet wire.

The new 2nd generation Maglev 2000 transport system does not require technology breakthroughs. The technology required already exists and is commercially available. The only requirement is government funding to assemble operating prototype vehicles and guideway components for test and certification at a government funded facility.

Its capabilities to lift fully-loaded highway freight trucks as well as passengers on the same low-cost modular component guideway, that can be an elevated monorail or a ground-level surface guideway, or a maglev-adapted railroad track including commuter rail, and electronically switch, would provide the versatility to realize the optimum revenues to recover the construction and operating costs making it possible for the NEC to be expanded to a nationwide high-speed network and achieve the national priority for a cleaner and healthier environment and safer, less congested highways for US logistics and personal vehicle operation.

The following map and table illustrates the advantages of constructing a National Maglev Network for both passengers and logistics. Clearly, it would be a major boost to the economy to have this in place in 20 years at no cost to the taxpayers, except for a small investment of about $600 million to fund a 5-year development and testing program, so that this much more advanced surface transport system can compete with the other transport offerings. Please note that in a 29,000 route mile network that connects 48 States plus Vancouver, Montreal and Toronto 315 million people would be connected and 232 million of them (74%) would live within 15 miles of a Maglev Station

US Interstate Maglev Network

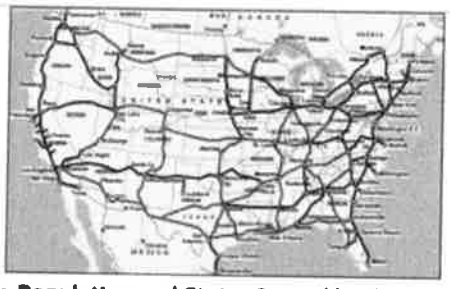

Table 1: Population and States Served by the Network

Maglev Network	States in Network	Population of States in Network (millions)	Population Living Within 15 Miles of Stations (millions)	Route Miles in Network
First, Second and Third Waves Completed	48 plus Toronto, Montreal & Vancouver	315 includes Toronto, Montreal & Vancouver	232 includes Toronto, Montreal & Vancouver	29,000
74% of population in States live within 15 Miles of a Station				

Greater Freight Rail Efficiency and Speed

Additionally, a national Maglev network, independent of existing Amtrak passenger rail, would free the railways for exclusive freight rail use and improve the speed and efficiency of the U.S. freight rail system. The high speed freight truck and passenger Maglev service running along the rights-of-way of the National Highway and Interstate Highway System and railroad rights-of-way for entering built-up urban areas and for using bridges and tunnels constructed for rail would be the least disruptive and lowest cost, most energy efficient and environmentally sustainable energy system.

Clearly, Maglev 2000's *unique capabilities and versatility* merits a US test and demonstration program to generate definitive cost and performance data to compete with European style steel-wheel railway trains and other 1st generation Maglev systems such as Japan Railway's 1st Generation Superconducting Maglev, which proved the Powell and Danby 1966 repelling force Maglev invention works.

The projected perfomance and costs of the new Maglev 2000 transport will be discussed in the following justification for Maglev 2000's recommendation to compete its alternative, but from what we know from full-scale component testing and the perfomance of the first generation Japanese Railway system, the Maglev 2000 system should be a major part of a U.S. strategy to avoid the fossil fuel combustion threat to humanity and economically benefit the American traveler, shipper, and consumer of goods by increasing the per capita savings for Americans by about $1,000 per year over current transportation systems. A new Maglev manufacturing industry would be a significant high-tech manufacturing, service, and construction job creator supported by exports.

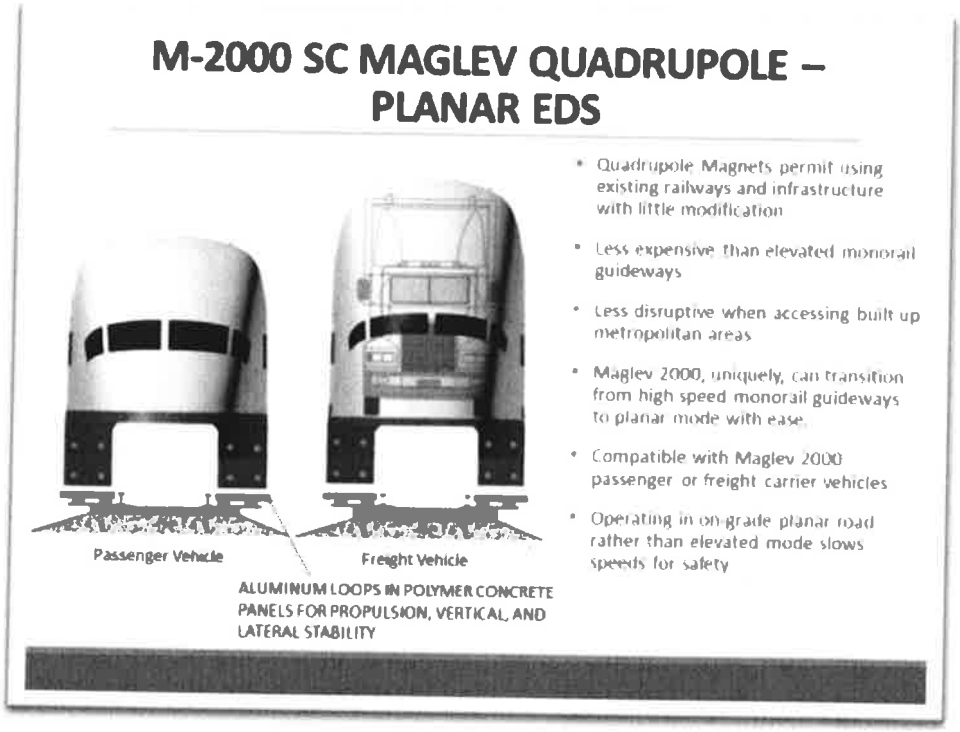

2nd Generation Maglev for the U S – Intercity Passenger and Trucking and Urban Rail Transit Systems

Today, US transport is a mess, and it will get much worse. In the years ahead, if we continue on our present path. The realities are seen in the list of DOT statistics given below.

We spend an enormous amount on transporting people and goods – 1.5 Trillion dollars per year, 10% of US Gross Domestic Product, $8,300 per household, as much as we spend on food plus clothing.

On average, Americans travel about 15,000 miles per year, more than halfway around the World. Sadly, it's not "See the World" travel. 88 percent (12,600 miles) is on congested bumpy highways with lots of potholes, or jammed together in noisy public transit buses, subways, and commuter rail cars. 12 percent (1,730 miles), on crowded airplanes that are often late. And travel on slow, jostling, intercity trains? 20 miles per year per person.

And the highways are very dangerous – 33,000 persons died on America's highways in 2010, with 3 million injured. The medical, insurance, health damage, and long-term quality of life cost? $877 Billion per year, according to the National Highway Traffic Safety Administration. [*The Economic and Societal Impact of Motor Vehicle Crashes, 2010 NYTSA DOT HS 812013*]

Americans own 230 million cars, with an average of 0.83 cars per person in our population of 312 million. On average, each American travels 11,500 miles per year on our highways. Today, congestion delays are estimated to cost the US $100 Billion dollars per year. The DOT projects that highway congestion will increase by 366 percent in 2040 AD. In 2035 on the 1,381 mile I-5 highway from San Diego to the Canadian border north of Seattle, 95% of the 550 miles of urban segments will be congested, with 85% of the rural segments congested. Traffic flow on the I-5 Interstate Highway will be enormous, with a maximum of 600,000 vehicles and 70,000 trucks per day

The Stressed Highway Freight Truck Problem

"By 2050 we'll have to move almost twice the amount of freight in our country. We also know we won't be able to do it with our current freight system."

- U.S. Secretary of Transportation Anthony Foxx (August 6th, 2014)

Highway trucks are a vital part of America's transport network. In 2011, highway trucks moved 11 Billion tons of goods (35 tons per capita) worth 10.5 Trillion dollars (66% of US GDP), at a cost of 500 Billion dollars, annually, for truck operations. And truck transport will almost double by 2040, with projected movement of 17 Billion tons worth 21 Trillion dollars. The following maps compare the present US truck traffic flow with truck traffic flow in 2035.

Average Daily Long-Haul Freight Traffic on the National Highway System 2002

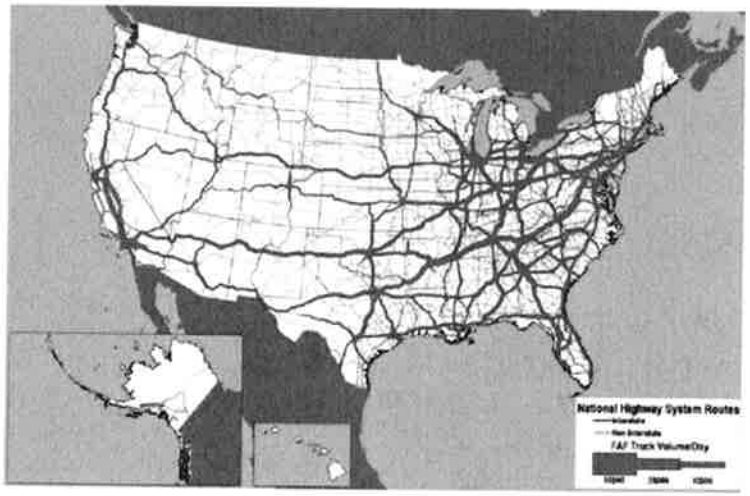

Average Daily Long-Haul Freight Traffic on the National Highway System 2035

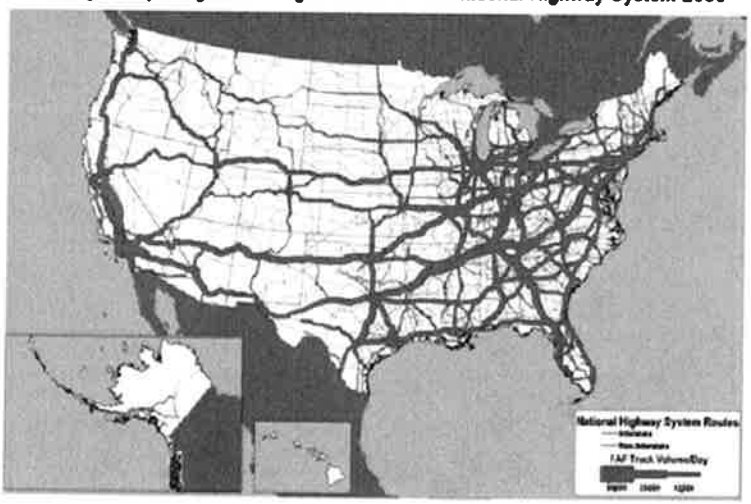

There have been a steady stream of highway solutions proposed and tried to deal with the highway truck traffic problem: special toll truck lanes, piggy back freight rail, larger rigs for highway freight hauling. It is a big problem and it is a dangerous problem. All you need to do is watch the big rigs try to make a 90 degree turn on a downtown street. Two lanes are required and it only contributes to the miserable experience of driving a passenger car.

These following two graphics illustrates the Maglev 2000 roll-on, roll-off truck and delivery van carrier which could reduce the big rig load on our highways and could contribute to reducing congestion and wear and tear on our highways. Electric self-driving car industries are being invested in to meet the requirements of America's future. The auto carrier designed to accompany passenger travel may be the answer.

Roll-on, Roll-off Maglev Truck and Auto Carriers

- Maglev-2000 Quadrupole Magnets Are Powerful Enough to Lift Fully Loaded Highway Freight Trucks.
- Gives Trucks the Capability to Roll-on Trucks at Maglev Terminal, Travel at 300 mph to Maglev Terminal and Roll-Off to Make Deliveries at Destination.
- Provides Greater Energy Efficiency Without Wear and Tear on Trucks and the Highways & Few Accidents.
- Increases Profits for Truckers and Pays for Construction of Guideways and Infrastructure.

Roll-on, Roll-off Maglev Auto Carriers

- Maglev 2000 Is Capable of Providing the Convenience of Carrying a Passenger's Vehicle for Long-Trips.
- Could Provide Recharging of Batteries on Electric Vehicles During Travel.
- Would Accommodate Future Self-Driving Vehicles.

The Accident and Health Hazard, and Loss of Economic Productivity of Driving in Congested Metro Areas

The transportation congestion problem in America is experienced by commuters in and around our high population density metro urban complexes. For most driving commutes, congestion is very severe and the daily drive to and from work is a white knuckle experience that saps creative energy before arriving at work.

The Benefits of Intraurban Maglev Public Transit

Lower fares, more convenient and comfortable service will persuade drivers to leave their cars and take mass transit. Lower fares are the result of Maglev's lower operating costs – much less maintenance required for tracks and vehicles, greater energy efficiency, increased employee efficiency and productivity, more convenient and more frequent service, shorter trip times, much lower government subsidy requirement, low passenger fares, and much more comfortable and healthier commuter travel.

As an example, the following map of the Long Island Railroad (LIRR) System, **the largest commuter rail system in the United States**. It carries 280,000 passengers per day on weekdays, with a total of 81 million passengers per year – 3 times the total Amtrak ridership for all America. The average LIRR fare cost paid by passengers is 26 cents per passenger mile; the actual average cost per passenger mile is 80 cents, with the difference of 54 cents per passenger-mile paid by government subsides. With the Maglev LIRR, the government subsidy will be much less.

Adaptation of the LIRR for Maglev service would result in major benefits to passengers, taxpayers, and people living near the LIRR tracks, including:

- Much lower taxpayer subsidies.
- Much shorter trip times, a factor of 2 to 3 shorter using higher speed, faster accelerating Maglev vehicles.
- Lower passenger fares.
- Very quiet operation, no rail or locomotive noise for passengers and people living near the LIRR tracks.
- More frequent service – individual Maglev vehicles, no infrequent long trains of many cars pulled by an engine.
- More comfortable rides: no vibration, bumping and swaying of RR cars, less crowded passenger seating.
- No diesel emissions of greenhouse gases and microparticulates.
- Safer operation – no 3rd rail, able to stop much faster in emergencies.

Cost and schedule for adapting the LIRR to Maglev? For 700 miles of one-way track, the capital cost at 4 million dollars per one-way mile would be 2.8 Billion dollars, about 93 million dollars annually over a 30-year amortization period. The track adaptation annual cost would be approximately 5% of the annual LIRR budget. Put another way, the 2.8 Billion dollars to adapt 700 miles of LIRR track is about 1/4 of the 10 plus Billion dollars the LIRR is now spending to dig a tunnel under the East River to connect the LIRR to Grand Central Station in New York City.

At 5 million dollars per Maglev vehicle, the cost of 300 vehicles to transport the LIRR's 280,000 daily riders would be approximately 1.5 Billion dollars, about 1/2 of the track adaptation cost. With mass production of Maglev vehicles, the unit cost will probably be much less than 5 million dollars.

With a Maglev LIRR, trip times will be much shorter. The average speed of LIRR trains is about 30 mph – a result of the slow acceleration and deceleration of conventional long trains of many cars, and the requirement that the train stop at many stations along its route. Maglev LIRR vehicles will travel as individual units, able to accelerate and

decelerate much faster, like ordinary automobiles, and able to travel past stations at full speed that they do not have passengers for.

Riders on the Maglev LIRR will love it. Trip times a factor of 2 shorter. Babylon to Montauk, a distance of 79 miles, today's travel time is 2 hours 22 minutes an average of 33 mph. On Maglev LIRR, it would be 1 hour 11 minutes, an average of 66 mph. There are presently 6 long trains per day on the Babylon – Montauk Branch. With Maglev LIRR, it could be 20 or more vehicles per day for the trip, much more convenient service. And, no noisy, bumpy, and swaying rides. Just quiet, comfortable, no vibration – like sitting in a chair in the living room.

Maglev can be adapted to other commuter rail systems in the US, like Metro North in New York State. We have considered adapting Maglev to US light rail systems; however, light rail ridership generally appears too low to be cost effective, and adaptation would be more difficult and expensive than for heavy rail and commuter rail.

What about Subways?

2nd Generation Maglev can also be adapted to existing subway systems, in particular, Maglev 2000 has done a study of the New York City Subway System. The figure below shows a New York City Subway car. The NYC Subway System is a marvel. It transports 6.5 million passengers daily. NYC's annual ridership is 2.4 Billion, 1/4th of the 10.4 Billion total annual US transit ridership for all modes – commuter rail, subways, and buses. However, as anyone who has ridden the NYC subway knows, it is not the most pleasant ride. Noise levels are astronomic, reaching 100 decibels at some stations, with possible hearing damage. Riders are jammed together in very crowded, bumping and swaying cars, breathing in steel dust and other particulates from erosion of rails and brakes.

Adaptation of the NYC Subway, and other transit systems in the US for Maglev will provide much better ride quality – no noise, no bumping and swaying of the transit cars, less crowded, more frequent service, and much cleaner air – no brake or rail dust to breathe in. As with the Maglev LIRR, operations will be cheaper and more efficient, and maintenance will be much less, enabling substantial reductions in government subsidies for public transit.

New York City Subway Car

The following shows a map of the NYC Subway System. In terms of government subsidies, it performs very well compared to other public transit systems. The average passenger fare per trip is $1.05, with an actual operating cost per trip of $1.40. The average fare per passenger trip for all US transit modes is $1.18, while the actual cost is $3.54 per trip, 3 times the fare cost. The $2.26 subsidy per trip is paid by taxpayers.

NYC Subway System

Adapting the NYC Subway System to Maglev will result in many benefits:

- Reduced subsidies from taxpayers
- Faster, much more comfortable trips – no bumping and swaying
- Quiet trips – no 100 decibels noise, which causes hearing loss
- No breathing in steel dust and other health harming microparticles generated by braking on steel rails
- Greater energy efficiency

Similar benefits will result from adaptation of Maglev to the other US heavy rail systems.

Details of the adaptation process for the NYC Subway System for Maglev operation is described in *"Maglev America"* a book authored by a collaborative of Maglev experts. Summarizing, the capital cost of the installation of the aluminum loop panels on the cross ties of the subway track plus the capital cost of the Maglev vehicles and their superconducting Magnets is projected to be 10 Billion dollars. Amortized over 30 years that would be 330 million dollars per year, 10 percent of the NYC subways present operating budget of 3.3 Billion dollars per year. The savings in operating costs made possible with Maglev would more than offset the adaptation cost. The adaptation process could be carried out in as little as 2 years, given adequate funding and high priority for the program.

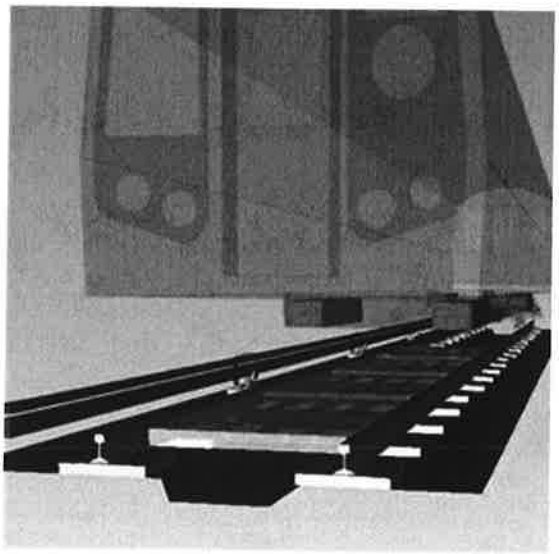

New York City Subway Track Adapted for Maglev Service

In summary, the National Maglev Network and Maglev Public Transit will be of great benefit to America in its capability for:

- Much lower cost of transport
- Faster and more comfortable travel with shorter trip times
- Safer, less congested highways, with substantial reductions in deaths and injuries
- Greater energy efficiency and reduced pollution
- Increased economic productivity.

New York City Subway Adapted to Maglev

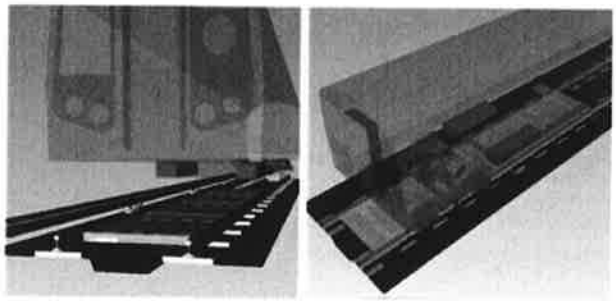

Cross Section Drawing of New York City Subway Track with attached Maglev Guideway Panel and vehicle quadrupole magnet above it

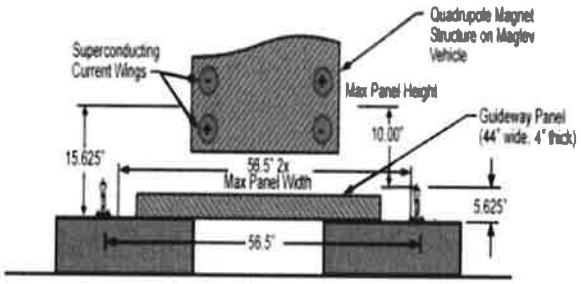

Low-Risk Test and Certification of the 2nd Generation Superconducting Maglev Transport for Passengers, Freight Trucks and Commuter Rail.

To be commercially implemented, new public transport systems must be tested and certified as safe and effective. While the Japanese Superconducting Maglev system has been extensively tested and operated safely and effectively for over a decade, the 2nd generation Maglev 2000 system is a sufficiently different public carrier that will require testing to be certified by the US Government. Full-size prototype components for the Maglev 2000 system have been successfully fabricated and tested. The next step is to assemble the components on operating prototype vehicles and a prototype guideway and subject the system to rigorous testing. It is estimated that a rigorous testing program will require about 5 years and 600 million dollars for the intercity carriers for passengers, trucks, and autos. A commuter rail car conversion along the same track would cost about $30 million dollars.

We believe that it would be prudent and minimize the risk to the taxpayers to test the Maglev 2000 system features that makes it distinctive from JR's superconducting Maglev. We recommend that its unique capability to levitate a

fully-loaded highway freight truck on a planar guideway, which would be constructed on an existing railroad track, as we have described, would be done first, as Phase 1. Phase 1 would also generate definitive cost data for the planar Maglev adapted RR track. Phase 1 of the Roll-on, Roll-off Truck Carrier, would not include the axle clamps, for the slow speed testing, but would use chain grapples that would cost less. The fully-loaded truck rig would cost about $60 million, and equipping a LIRR car for commuters about $30 million.

It is proposed that the Maglev Test and Certification Facility for the initial test be located on Long Island at Calverton, the former site for testing Navy aircraft. (The following *Figure* shows a Google Earthview of the Calverton Site). The site has ample space for Phase 1 of the patented Maglev 2000 adapted railroad track system and is adjacent to the existing LIRR track from Ronkonkoma to Riverhead, on which extended continuous running tests of Maglev 2000 commuter vehicles over substantial distances can be carried out. The Maglev Test and Certification Program is outlined below. At the end of Phase 2 (Phase 1 plus Phase 2 is projected to take 30 months), M-2000 will have been extensively tested on a 2-mile track at Calverton. In Phase 3, a section of LIRR track, probably the 25-mile section between Ronkonkoma and Riverhead, will be modified for continuous long-term running tests of Maglev 2000 vehicles. After 18 months of continuous testing, it is anticipated that the Maglev 2000 system will be certified for commercial implementation.

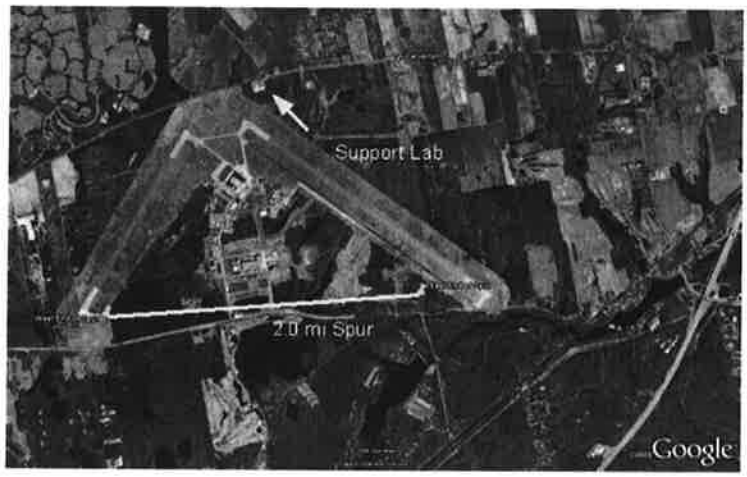

Concept Layout of Maglev 2000 Test and Certification Facility at Calverton, NY

Obtain government funding for Maglev 2000 Test & Certification Facility at Calverton, Long Island.

Proposed facility will test & certify full-scale Maglev vehicles on operating guideways, for both elevated monorail and RR track types

3 Phase test program for Maglev on railroad applications

- Phase 1: Test passenger vehicles at speeds up to 60 mph on 1/2-mile RR test tracks (18 months)
- Phase 2: Test passenger vehicles at higher speeds (150 mph) on 4-mile RR test track. (12 months)
- Phase 3: Long term running tests on existing section of LIRR track adapted for Maglev travel, e.g., Riverhead to Ronkonkoma (18 months)

Following certification, begin implementation and service on selected LIRR railroad lines

In a separately funded parallel program, the Calverton facility will also test and certify locally assembled Maglev 2000 vehicles for high speed Intercity travel on elevated monorail guideways

The projected cost for the first 2 phases of the Maglev on Railroad Test and Certification program is $90 Million dollars. Phase 3 will require additional funding.

Summary

The safety and environmental benefits of Maglev? Enormous! The National Maglev Network will save many 10's of thousands of lives and hundreds of thousands of injuries now happening in accidents on America's highways every year. It will save hundreds of Billions of dollars, annually, now lost to highway accidents. It will greatly reduce the 5 Billion barrels of fossil fuel we now use for transport and the 1.8 Billion tons of CO_2 greenhouse gas emitted from our tailpipes and jet engines. It will also greatly reduce the damage to our hearts and lungs from the pollutants and microparticles emitted by our 230 million automobiles and 10 million trucks.

The benefits to the economy and our quality of life will be tremendous. By taking a good portion of the trucks and autos off the road by offering a cheaper, more convenient, safer alternative, not only will the National Maglev Network substantially reduce highway deaths and injuries, it also will greatly reduce highway traffic congestion and delays, which today cost the US economy 100 Billion dollars, annually. This, plus reducing the 900 Billion dollars now spent on medical expenses, insurance, health damage and lost income from highway accidents, plus Maglev's considerably lower cost per passenger mile and truck ton mile, will greatly benefit the US economy, saving each of us more than $1,000 per year.

- Passenger-only-rail is an anchor and headwind on economic growth. Using the very expensive guideway (90% of cost) for both hauling freight trucks as well as passenger would benefit everyone in the country: business, consumers, shippers, and travelers.

- The NEC as a higher speed steel-wheel or JR Maglev would be a serious mistake.

- It would ease congestion but won't solve our real problem which is congestion around our metro areas.

- US commuter rail systems are operating at a deficit even as fares increase.

- Our studies show that NYC's Metro-North, LIRR and Subway commuter could improve its service and reduce fares by adapting to Maglev. It won't be a whole lot faster as a intraurban commuter service but it will be quieter and a better neighbor and eliminate the wheel-on-rail hazards that are costly to prevent and maintain properly and it will operate more efficiently.

- Maglev 2000 would be cheaper, eliminate public subsidy and create an industry that could also equip our intraurban systems to meet the requirements of the trend of urbanization in the US and the World.

- The new Maglev industry would also develop applications such as very cheap Energy Storage and cheap, more reliable Maglev Launch of Space payload. These applications are described in the book "Maglev America". Superconducting Maglev was invented in America and should be made in America. See: www.magneticglide.com

The Inevitability of Superconducting Maglev Transport

Historical evidence of transport systems suggests that the driver for the transport systems evolution is strongly related to efficiency, speed, and convenience. The superconducting Magnets of the Maglev 2000 system are very efficient. Pound for pound the magnets require only about 1/13th the electric energy of electric motor driven wheels for equal speed trains. As has been repeated several times there is no rolling friction, the only friction is the aerodynamic drag of atmosphere on the vehicle. In a vacuum tube, the speed is unlimited. For example, Maglev can propel cargo into space orbit in a vacuum launch tube by reaching a high enough escape velocity to place cargo in a geosynchronous space orbit, making it possible to position solar energy generating satellites in fixed space orbit to collect the enormous power of the Sun and beam the energy to Earth. This technology may be the ultimate non-fossil source of energy for the future as we begin the necessary transformation of energy to non-fossil fuels. This is why it is extremely important that the United States develop the capacity for manufacturing leadership in superconducting magnet technology. This year is the 50th anniversary of Drs. James Powell and Gordon Danby's Invention of the superconducting Maglev system in 1966. The system has been proven by the engineering work of Japan. Japan's Maglev is a very efficient passenger only system but the evolution of the magnets that operates in both the planar and monorail mode and development of the method to shield the passenger compartments from the extremely powerful magnetic forces of superconducting Maglev magnets provides the Maglev 2000 system with the versatility and levitation power to more readily address the transportation challenges of the United States.

The graphic that follows depicts the growth rates of the various modes of transport in the US.

Efficiency is the Driver in the Evolution of Transportation

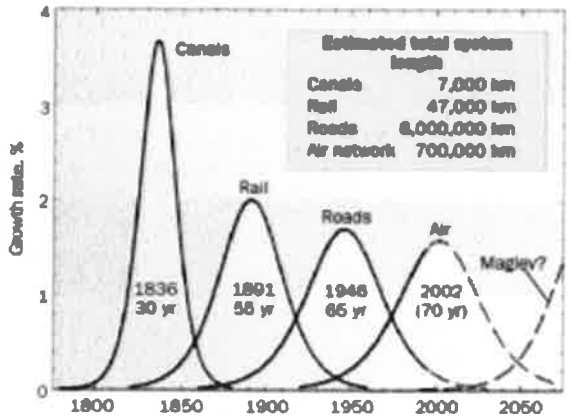

Smoothed historical rates of growth of the major components of the U.S. transport infrastructure, showing the peak year and the time for the system to grow from 10% to 90% of its extent (conjecture shown by dashed curves).

Source: Auzuet, Jesse and Cesare Marchetti, "The Evolution of Transport," The Industrial Physicist, American Institute of Physics, April/May 2001, pp. 28-34

A NATIONAL SC MAGLEV NETWORK AWAITS GOVERNMENT INVESTMENT IN A MAGLEV TEST FACILITY SIMILAR TO THAT OF JAPAN AND GERMANY

PROBLEM: CURRENT U.S. SURFACE TRANSPORT IS CONGESTED, COSTLY, INEFFICIENT, & DANGEROUS

1. OLD, OBSOLETE & UNSAFE INFRASTRUCTURE

2. HIGH REPAIR, OPERATING & MAINTENANCE COSTS

3. ALMOST TOTALLY DEPENDENT ON FOSSIL FUELS

4. GENERATES TONS OF UNHEALTHY POLLUTION AND CARBON DIOXIDE EVERY MINUTE

SURFACE TRANSPORTATION POLICY OBJECTIVES:

1. IMPROVE SAFETY
2. INCREASE ENERGY, ENVIRONMENTAL & ECONOMIC EFFICIENCY OF U.S. LOGISTICS IN NEXT GENERATION OF SURFACE TRANSPORTATION
3. REDUCE SUBSIDY BURDEN ON TAXPAYERS
4. INCREASE THE NUMBER OF MANUFACTURING, CONSTRUCTION AND HIGH TECH ENGINEERING AND SERVICE JOBS

HIGHWAY SAFETY

- 33,000 deaths per year! In the 15 years since 2000 AD, 500,000 people have died on US highways, more than the 426, 665 battle deaths in all of America's wars in the 20th Century – The Spanish American, World Wars I and II, Korea, Vietnam, and Desert Storm. Over 100 times more than the 9/11 deaths.
- America needs to build new 21st Century transport systems that will greatly reduce highway deaths, injuries, and collisions, eliminate pollution and greenhouse gas emissions, and be faster, cheaper, and less stressful. Sadly, America is not doing much right now to achieve this goal.

AIR QUALITY HEALTH CONCERNS

Along our heavily traveled auto and freight corridors automobile and truck exhausts create a high level of unhealthy pollution.

Studies show that polluted air in high traffic corridors cause:

- Mental retardation and stunted lung development in fetuses & young people.
- Higher Risk of Cancer
- Higher Incidence of Asthma

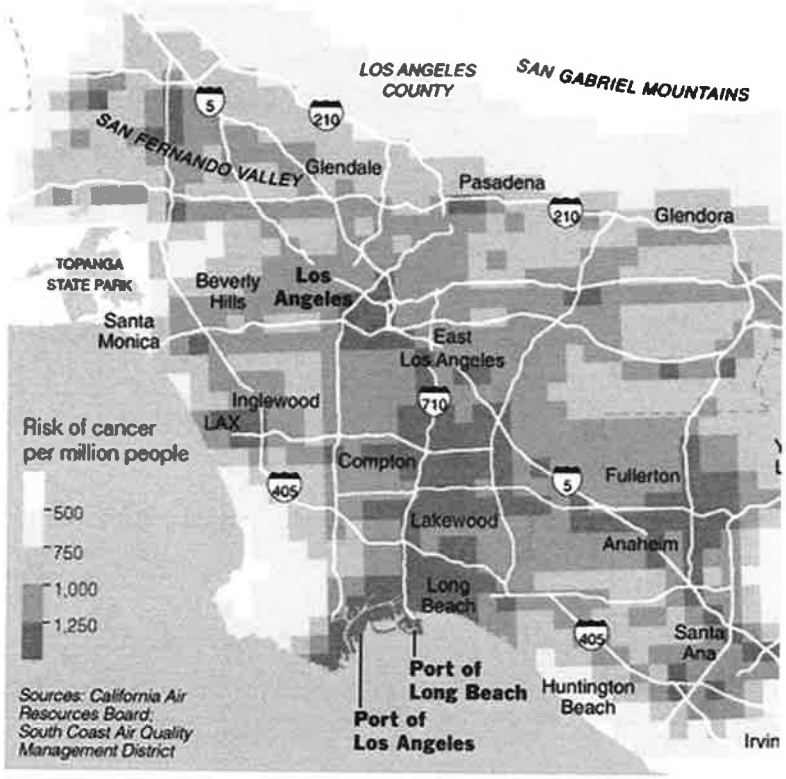

EFFICIENCY IS THE DRIVER IN THE EVOLUTION OF TRANSPORTATION

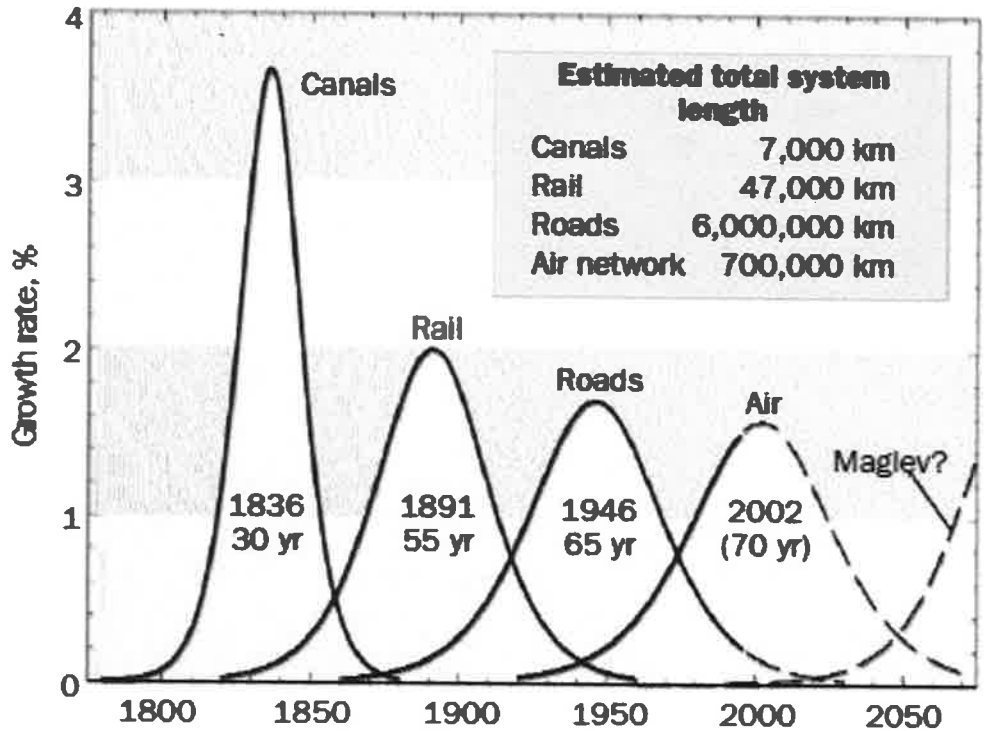

Smoothed historical rates of growth of the major components of the U.S. transport infrastructure, showing the peak year and the time for the system to grow from 10% to 90% of its extent (conjecture shown by dashed curves).

Source: Ausubel, Jesse and Cesare Marchetti, "The Evolution of Transport," The Industrial Physicist, American Institute of Physics, April/May 2001, pp. 20-24.

SOLUTION:

Augment U.S. Interstate Highway System with 300 mph Electric Maglev Guided Surface Transport Technology

- **INCREASE ECONOMIC EFFICIENCY AND SAFETY OF US LOGISTICS AND TRAVEL**
- **IMPROVE PUBLIC SAFETY & HEALTH**
- **REDUCE PUBLIC TAX BURDEN**

US INTERSTATE MAGLEV NETWORK

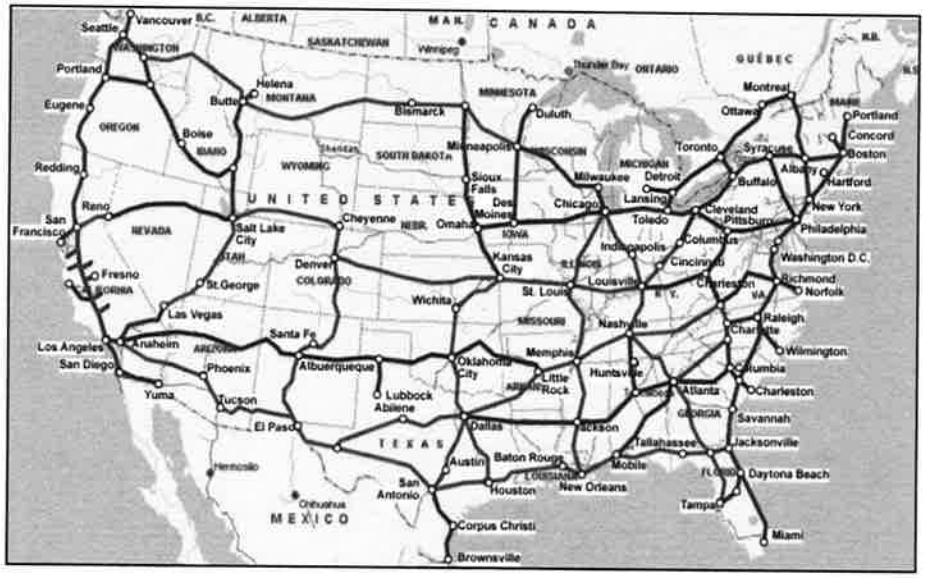

Table 1: Population and States Served by the Network

Maglev Network	States In Network	Population of States in Network (millions)	Population Living Within 15 Miles of Stations (millions)	Route Miles in Network
First, Second and Third Waves Completed	48 plus Toronto, Montreal & Vancouver	315 includes Toronto, Montreal & Vancouver	232 includes Toronto, Montreal & Vancouver	29,000
74% of population in States live within 15 Miles of a Station				

MODERN PROPULSION OPTIONS

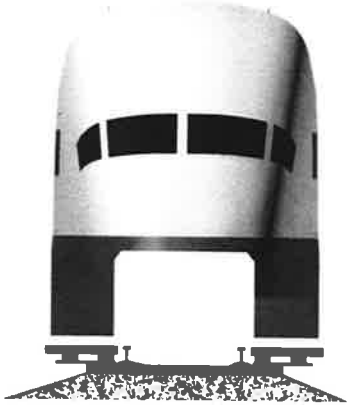

M-2000 SC MAGLEV EDS QUADRUPOLE IN PLANAR MODE

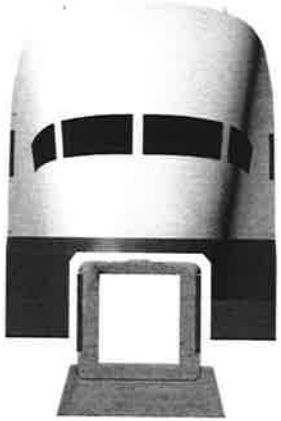

M-2000 SC MAGLEV EDS QUADRUPOLE IN MONORAIL

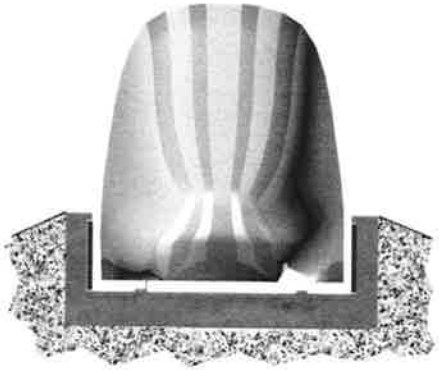

JR SC MAGLEV EDS - DIPOLE

MAGLEV EMS

DIESEL HYBRID

ELECTRIC HSR

DIESEL HYBRID PROPULSION

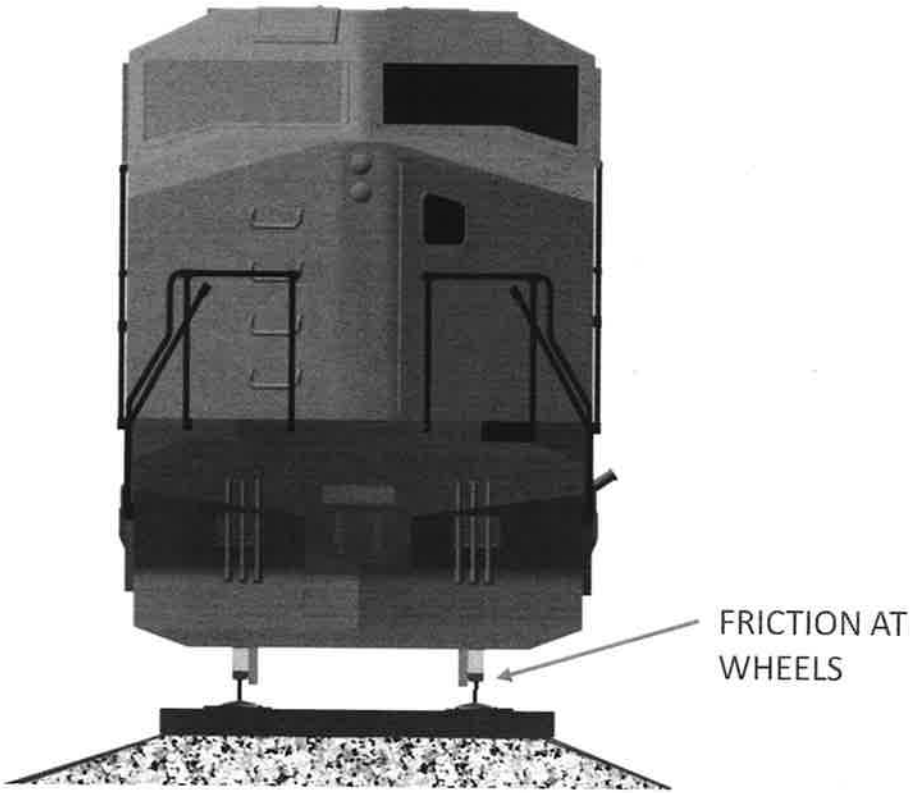

- Diesel Hybrid train is being designed with sophisticated sodium-metal batteries that will store energy recovered during braking
- GE built its first electric locomotive prototype in 1895. However, high electrification costs caused GE to turn its attention to Diesel
- Hybrid diesel can run constant speed of 110, top speed 125 mph
- Requires fossil fuel
- Heavy weight of steel wheeled locomotive on steel rails is required for traction. This translates into high track maintenance and greater operating costs

ELECTRIC PROPULSION – HSR

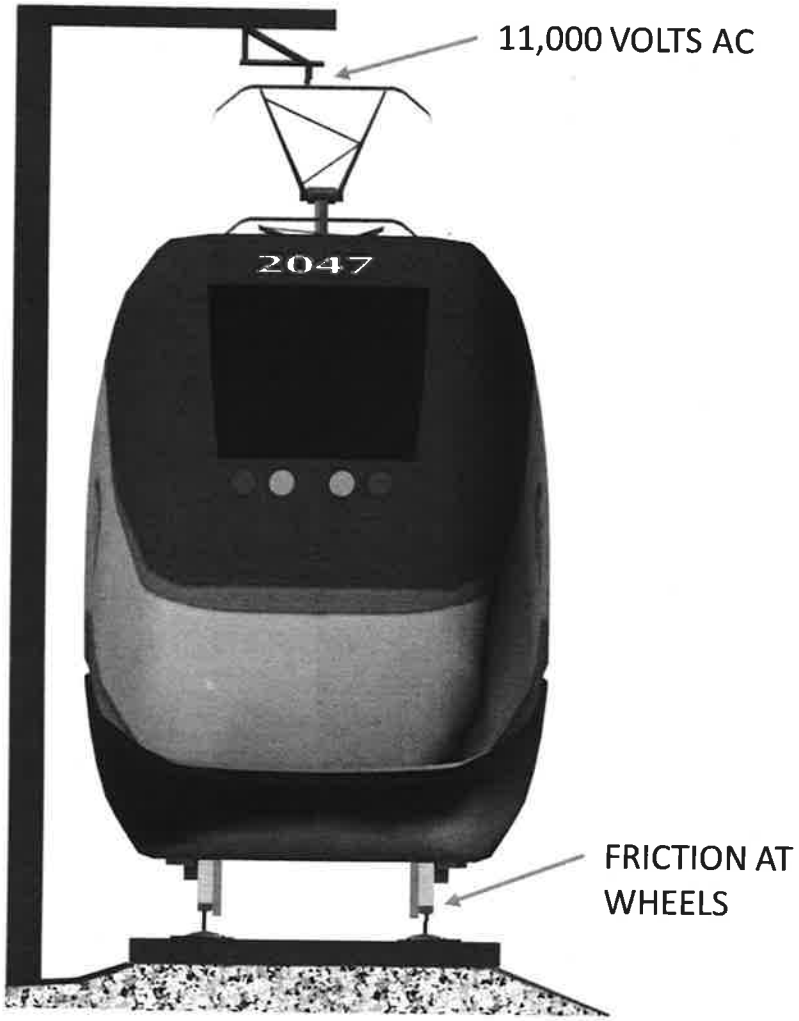

- The *Acela Express* is the only high speed rail service in North America that exceeds 125 mph.
- The Amtrak Acela service started in 2000 and is certified for a top speed of 165 mph and reaches a maximum of 150 mph in regular service.
- America's government-run passenger rail service, received $1.4 billion in taxpayer subsidies.
- The *Acela* carried more than 3.3 million passengers in 2011 compared to domestically, **U.S. airlines** carried 642.2 million **passengers**, in 2011
- Study shows that Amtrak loses $32 per passenger
- Amtrak service is often shut-down due to commercial electric power problems

MAGNETIC PROPULSION-EMS

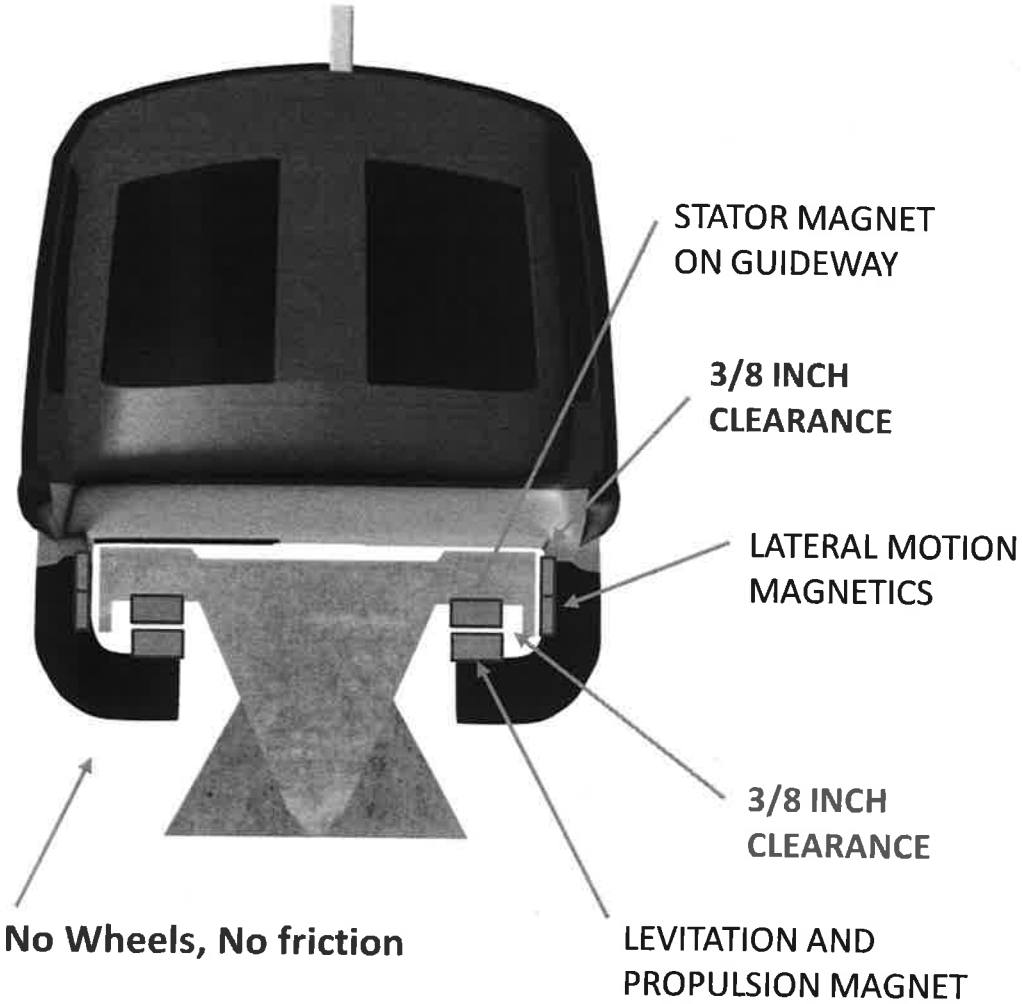

- Shanghai Maglev built by Germany's Transrapid, runs at 268 mph. Daily operation started in 2004. The journey takes 7 minutes and 20 seconds to complete the distance 18.6 miles. A train can reach 217 mph in 2 minutes, with the maximum normal operation speed of 268 mph reached thereafter.
- Record speed of 311 mph
- The electromagnetic suspension EMS uses <u>attractive magnetic force</u> system to levitate.
- Requires emergency battery power in event of power failure
- High construction cost of precision guideway to keep 3/8 inch clearance

JR SC MAGLEV DIPOLE PROPULSION – EDS

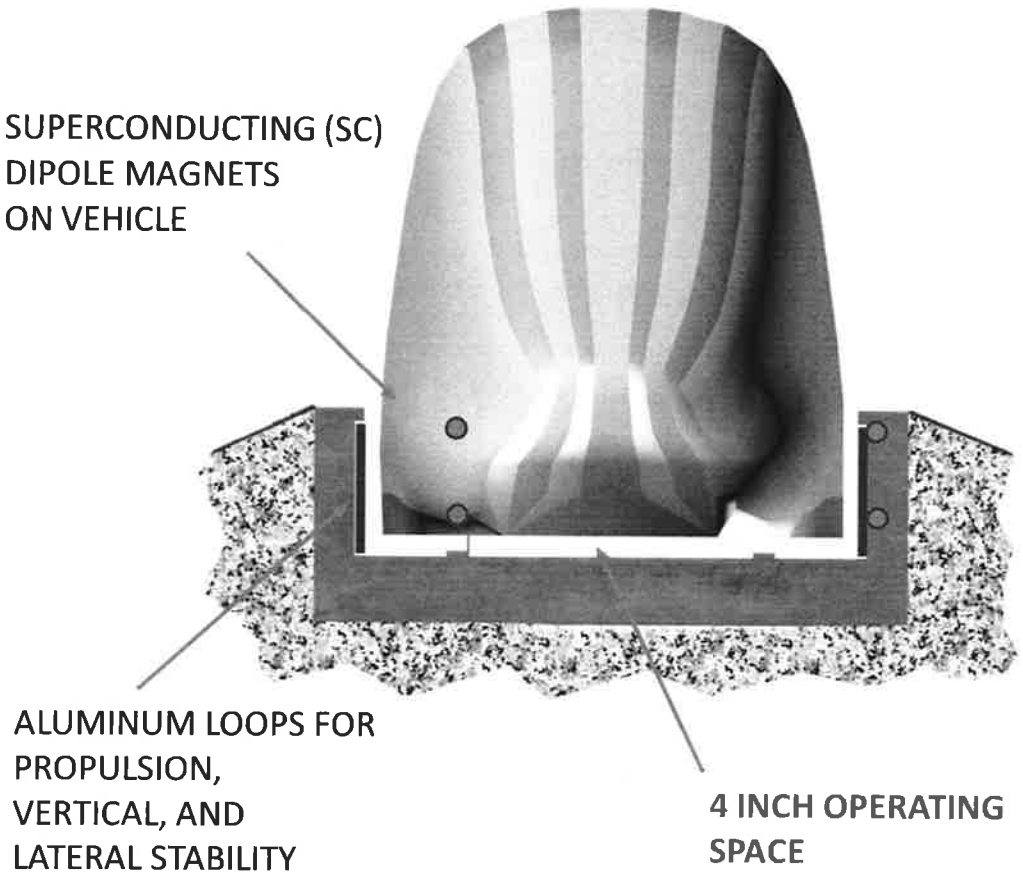

- Japan's Maglev Passenger Transport is based on 1966 U.S. invention by Drs. James Powell and Gordon Danby from Brookhaven National Laboratory.
- 1st Generation Maglev 2000 superconducting (SC) repelling magnetic force system built by Japan Central Railway System, testing began in 1977.
- In December 2003, a three-car Maglev reached a maximum speed of 361 mph, **(world speed record for rail vehicles)**
- The major differences between EDS maglev train and EMS maglev train is EDS maglev train uses repelling force of super-cooled, superconducting electromagnets to achieve 4 inch operating clearance
- U-track disadvantage in heavy rain ice and snow

M-2000 SC MAGLEV QUADRUPOLE – MONORAIL EDS

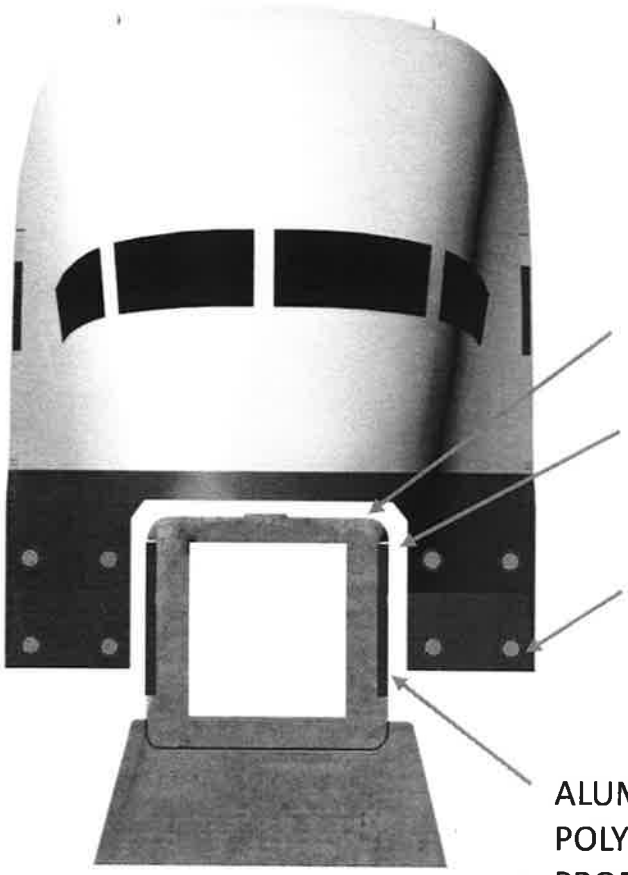

- Drs. James Powell and Gordon Danby have created 2ND Generation Maglev 2000 System Design
- Hollow prefabricated box beam elevated monorail guideway with polymer concrete panels with aluminum loops to provide vertical lift, lateral stability, and linear synchronous propulsion provides for safe high-speed operations.
- Eliminates overhead catenary/pantograph
- Superconducting (SC) quadrupole magnets can run even after the power supply has been shut off, for example in the event of a blackout.
- It's 4 inch operating clearance can operate in ice and snow conditions. The 4" gap allows ground movement such as caused by earthquakes.

M-2000 SC MAGLEV QUADRUPOLE – PLANAR EDS

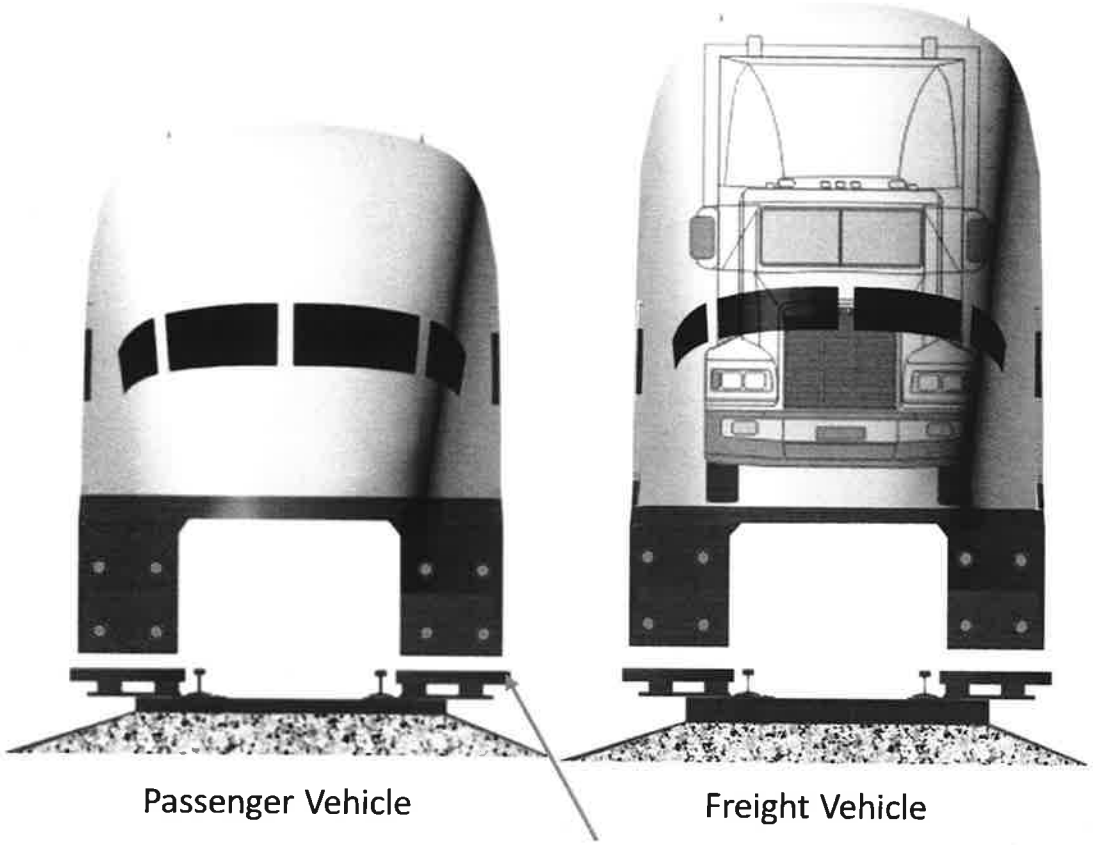

- Quadrupole Magnets permit using existing railways and infrastructure with little modification
- Less expensive than elevated monorail guideways
- Less disruptive when accessing built up metropolitan areas
- Maglev can transition from high speed monorail guideways to planar mode with ease.
- Compatible with Maglev 2000 passenger or freight carrier vehicles
- Operating in on-grade planar road rather than elevated mode slows speeds for safety

NEW YORK CITY SUBWAY ADAPTED TO MAGLEV

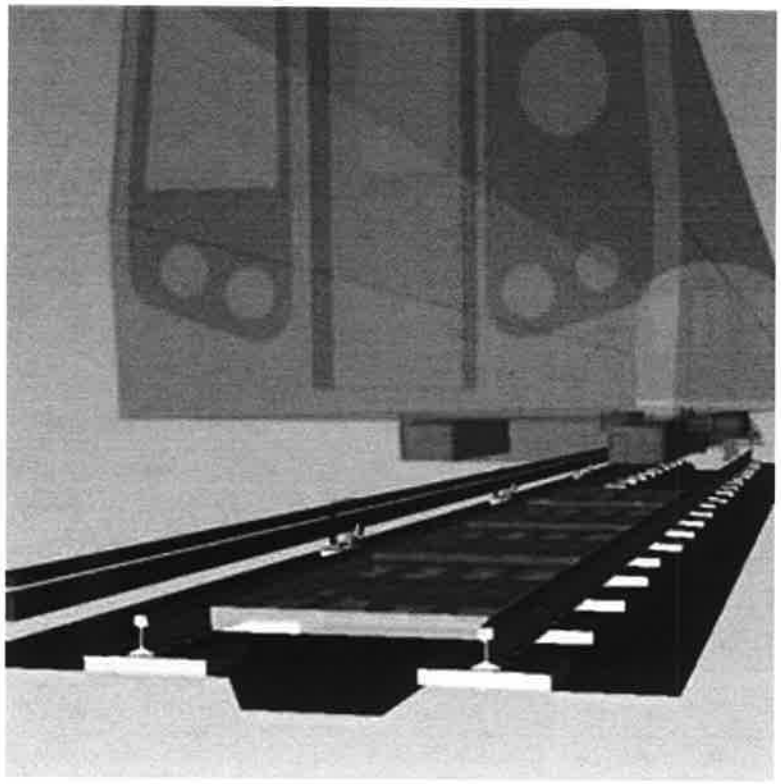

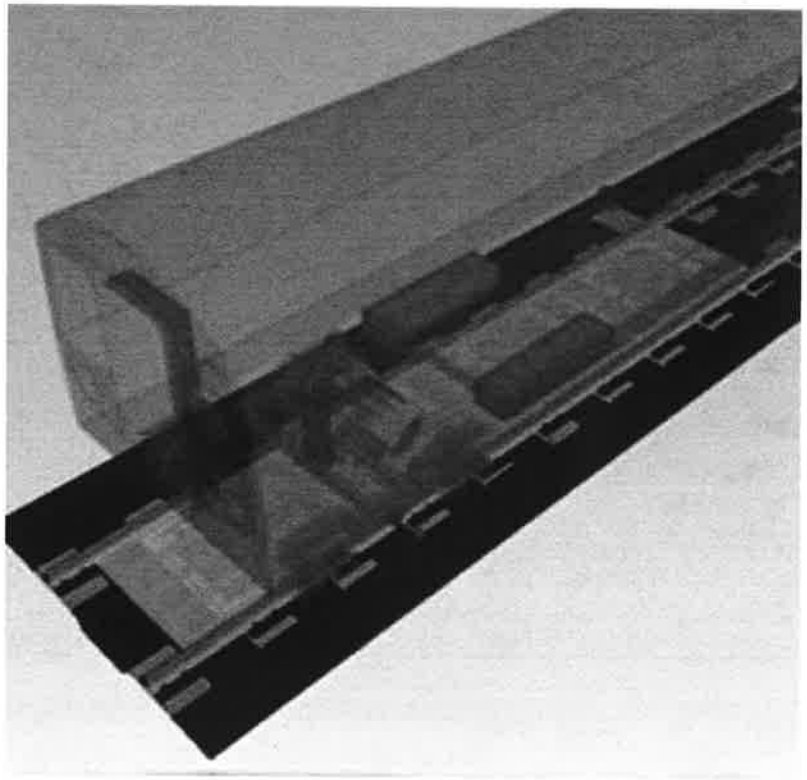

CROSS SECTION DRAWING OF NEW YORK CITY SUBWAY TRACK WITH ATTACHED MAGLEV GUIDEWAY PANEL AND VEHICLE QUADRUPOLE MAGNET ABOVE IT

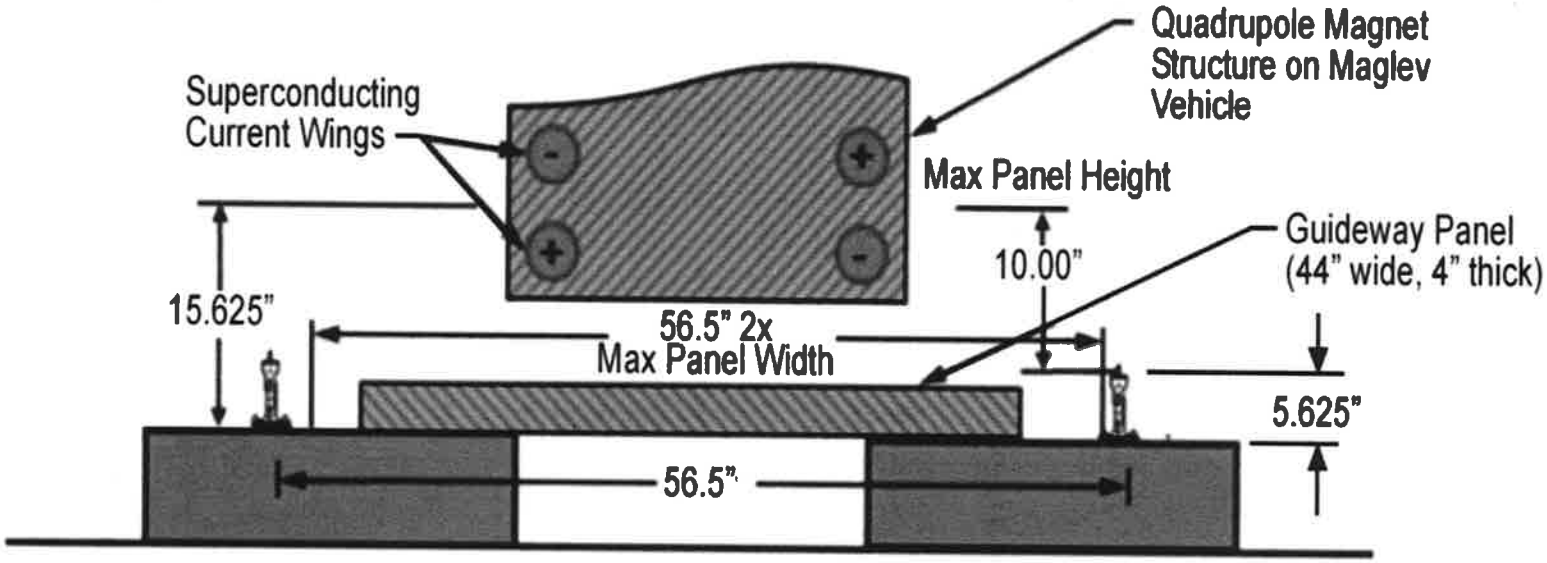

GAP ADVANTAGE:
REPELLING FORCE VS ATTRACTIVE FORCE

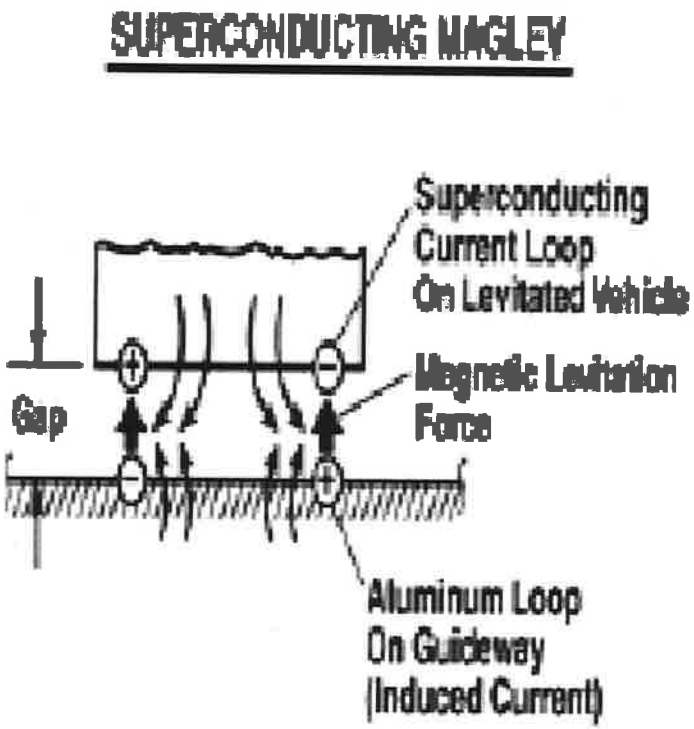

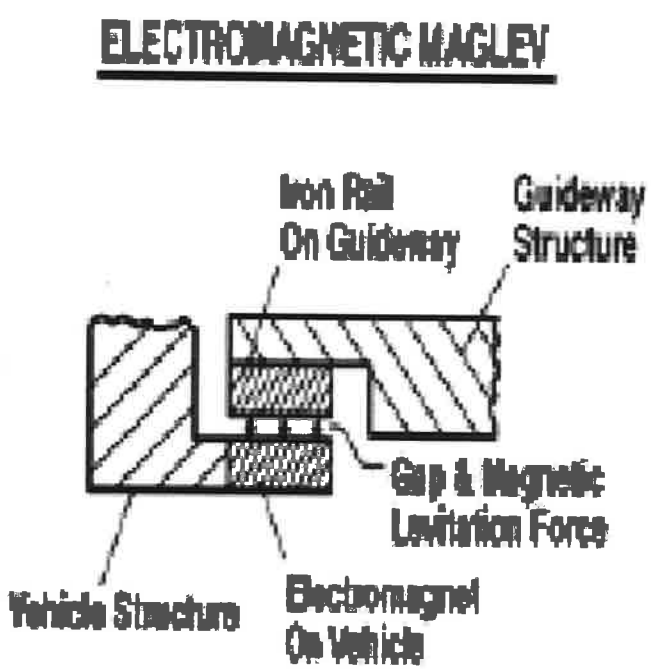

WHY SUPERCONDUCTING (SC) MAGLEV?

- Maglev eliminates rolling friction and is therefore more efficient than steel-wheeled guided surface transport.
- Superconducting Magnets eliminate electrical resistance and are much more powerful than conventional electromagnets.
- Conventional electromagnets of equivalent strength to superconducting magnets would melt the magnets.

WHY 300 MPH INTERCITY TRUCKING?

- Highway Damage by Trucks is Equivalent to 9400 Autos.
- Average Cost of Trucking is 30 cents per Ton mile Compared to SC Maglev at 10 cents Per Ton Mile.
- Highway Freight Trucks Average 50 mph.
- Trucks are Often Slowed by Weather and Congestion.

MAGLEV ECONOMICS

- Savings of $1,000 Per Capita in Reduced Cost of Goods Delivered and Reduced Travel Fares
- 5 cents per passenger mile, & 10 cents per ton mile based on
- Much Faster Construction with Factory Built Guideway Components
- Much Lower Operating Costs of Superconducting Magnets by Avoidance of Rolling-Friction of Rails and Much Greater Efficiency & Regeneration of Electricity to Grid When Braking.
- Much Lower Maintenance Costs Compared to Heavier Steel-wheel Rail Systems and Catenary for Electric Current Transmission

INTERNATIONAL COMPETITION

"This is the story of a contest almost no one is watching. At stake is the preeminence in the production and sale of a revolutionary new mode of transportation. It is called Magnetic Levitation-Maglev for short. It will define the coming century much as the railroad defined the last one, and the automobile and airplane have defined this one." Daniel Patrick Moynihan, 1989

Japan

Germany

China

Korea

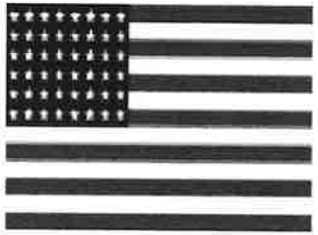

United States is not competing.
It has <u>not</u> funded a test facility like those funded by the governments of Japan, Germany, Korea, and China

GERMANY'S INVESTMENT IN TRANSRAPID 19.5 MILE TEST FACILITY

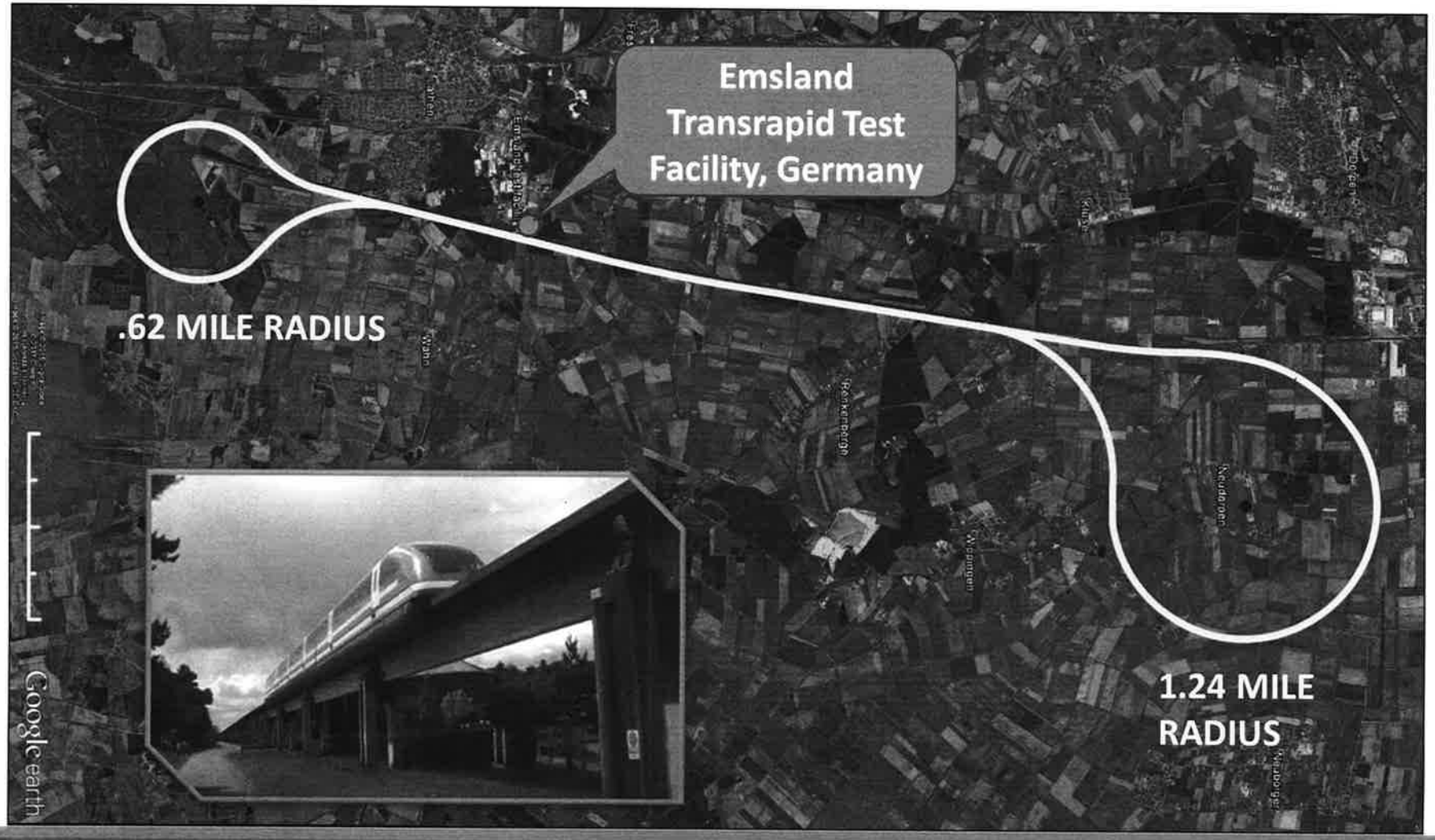

JAPAN'S INVESTMENT IN YAMANASHI 26.6 MILE MAGLEV TEST FACILITY

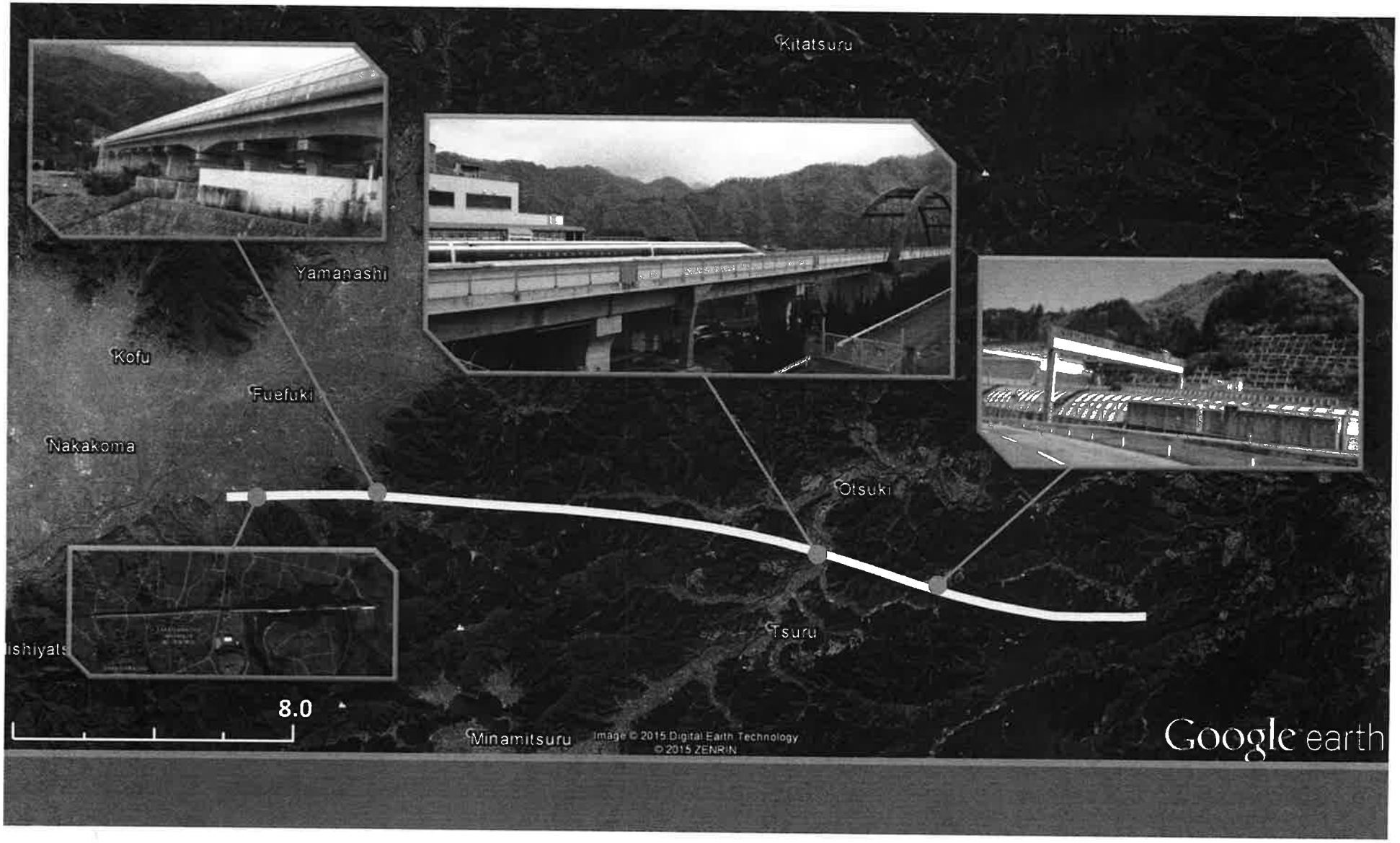

MERKEL RIDES MAGLEV TRAIN AFTER SHANGHAI TOUR

GOV.cn Wednesday, May 24, 2006

Accompanied by Chinese Vice Premier Zeng Peiyan (R), German Chancellor Angela Merkel rides the maglev (magnetic levitation) rail line in Shanghai, east China, May 23, 2006.[Xinhua Photo]

Angela Merkel finished her maiden trip to China as German Chancellor with a cruise on Shanghai's futuristic Maglev train yesterday.

Merkel's business-centred visit concluded with her riding from Longyang Road to Pudong International Airport on the Siemens-made magnetic train.

After clinching 19 major business co-operation deals on Monday, Merkel met members of the German business community in Shanghai during her 16-hour long visit to the city, making sure they were the first to know about the freshly inked agreements.

"You have already done a good job in Shanghai," Merkel told them. "The 2010 Shanghai World Expo is a good opportunity for you, too."

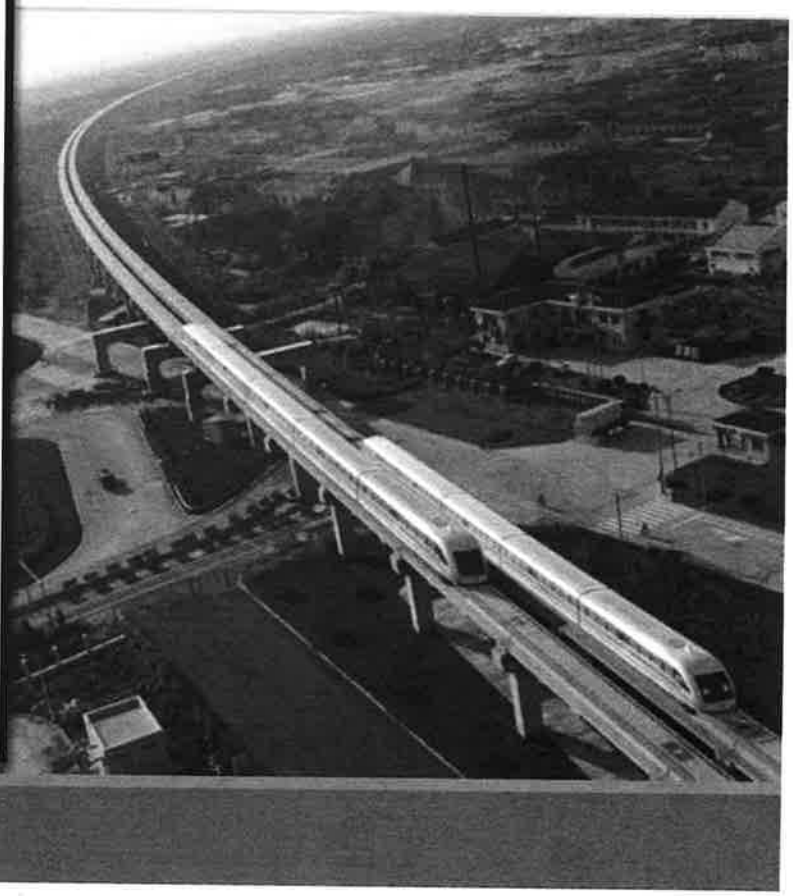

The Japan Times NEWS

NATIONAL

Daschle rides maglev in push for U.S. version

KYODO, JIJI

ARTICLE HISTORY | NOV 17, 2013

NAGOYA – A former senator advising a U.S. maglev advocacy group rode one of the magnetically levitated trains on Saturday on a test track in Yamanashi Prefecture.

Tom Daschle, who is advising The Northeast Maglev group, praised the quality of the Central Japan Railway Co. train after taking a ride at speeds of 500 kph.

TNEM is lobbying for a maglev system to be built between New York and Washington in conjunction with the railway, better known as JR Tokai.

"We'd like to share the technology as a symbol of Japan-U.S. cooperati
will be an international standard that can be adopted anywhere in the
Chairman Yoshiyuki Kasai.

House of Japan

JAPAN NEWS AUTO TECHNOLOGY CULTURE TRAVEL CUISINE . ALL YOU NEED TO KNOW ABOUT JAPAN!

JR TOKAI MAY OPEN NEW MAGLEV TRAIN STATION BEFORE 2020 OLYMPICS

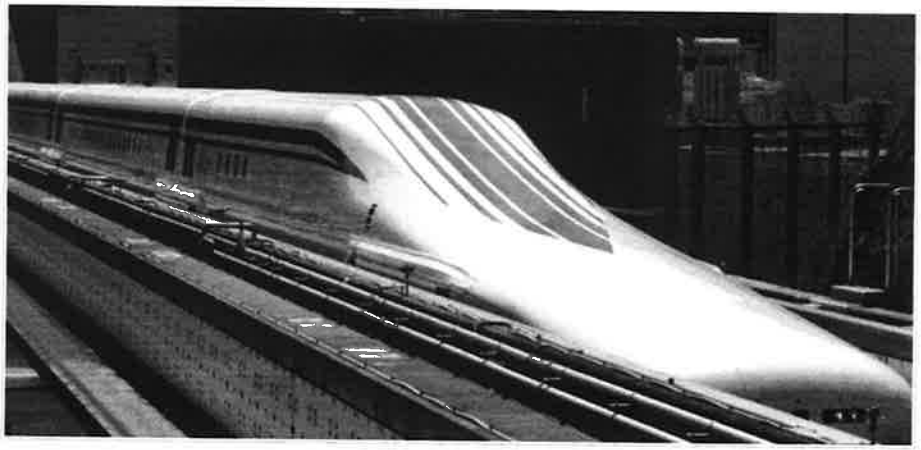

Central Japan Railway Co. is considering opening a new station for its magnetically levitated trains in Kofu in Yamanashi Prefecture, west of Tokyo, ahead of the 2020 Tokyo Olympics, according to a source familiar with the matter.

AERODYNAMIC DESIGN

An artist's drawing of an aerodynamic design. A 300 mph Maglev vehicle experiences only atmospheric drag. There is no rolling friction since the Maglev vehicle uses the repelling force of magnetism to travel more than 4 inches above the guideway panels, which are shown here mounted on the side of a prefabricated concrete beam.

SURFACE TRANSPORTATION ACT REAUTHORIZATION

Proposed Amendment to Establish a Maglev Transportation Technical Testing Program

Implement, to the maximum extent practical, preliminary qualifications of magnetically levitated (Maglev) guideway gage standard, including lowest cost potential for two-way elevated narrow-beam superconducting repelling force Maglev guideway system with capabilities for carrying tractor-trailer type highway freight trucks and freight containers, high-speed electronic switching, dual-use of conventional railway trackage and deployable along the rights-of-way of highways, railways, and power lines consistent with section 302 of Title 49, United States Code; provided that the Secretary of Transportation in collaboration with Department of Commerce, National Institute of Standards and Technology shall establish a five-year engineering development, demonstration and technical testing program to competitively test preliminary maglev guideway gage standards and establish these standards by rules issued not later than 6 years from the date of enactment of this paragraph.

SC MAGLEV TEST & CERTIFICATION FACILITY CONCEPTUAL VIEW

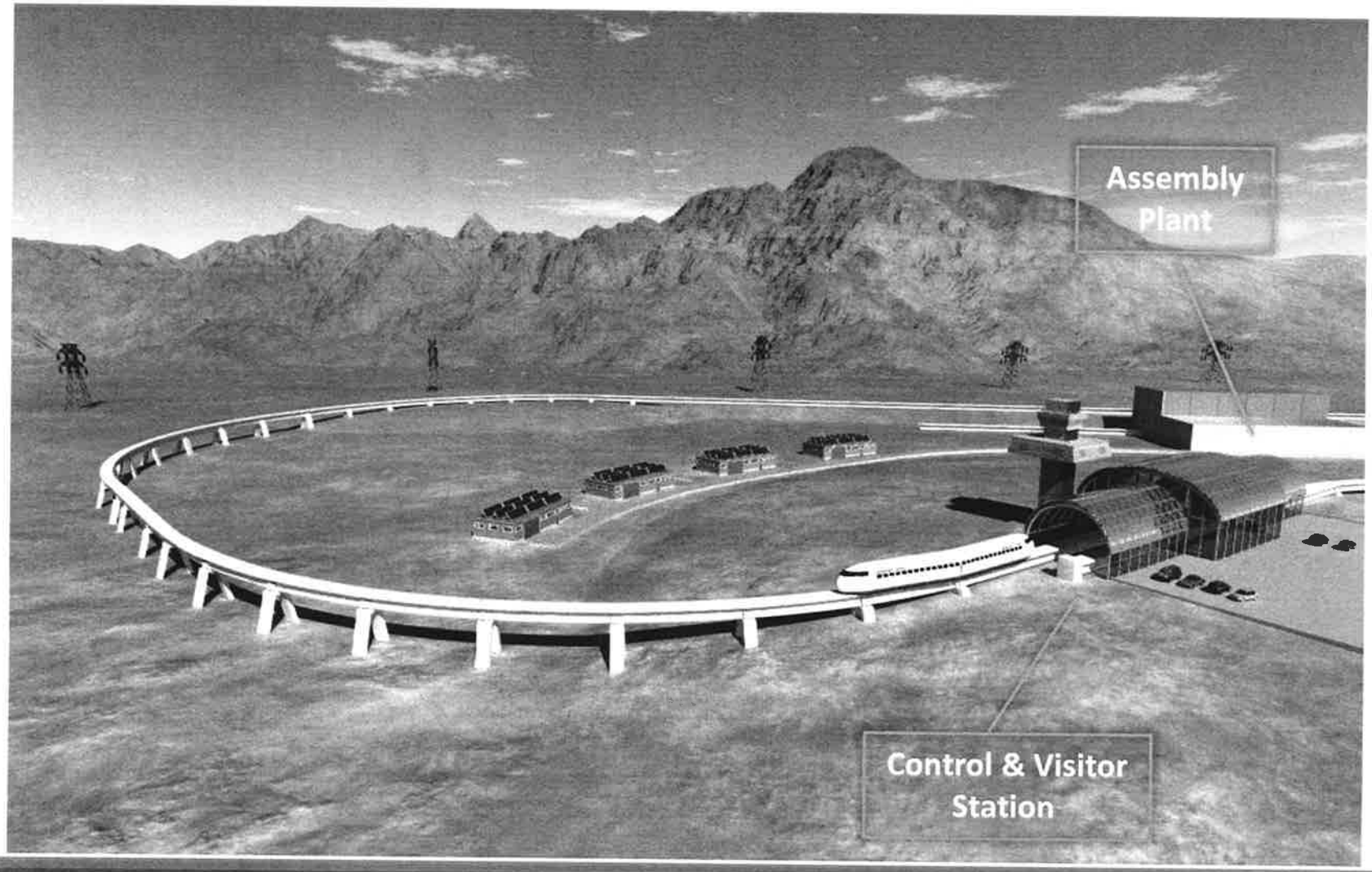

DUAL/BIDIRECTIONAL MONORAIL CONFIGURATION

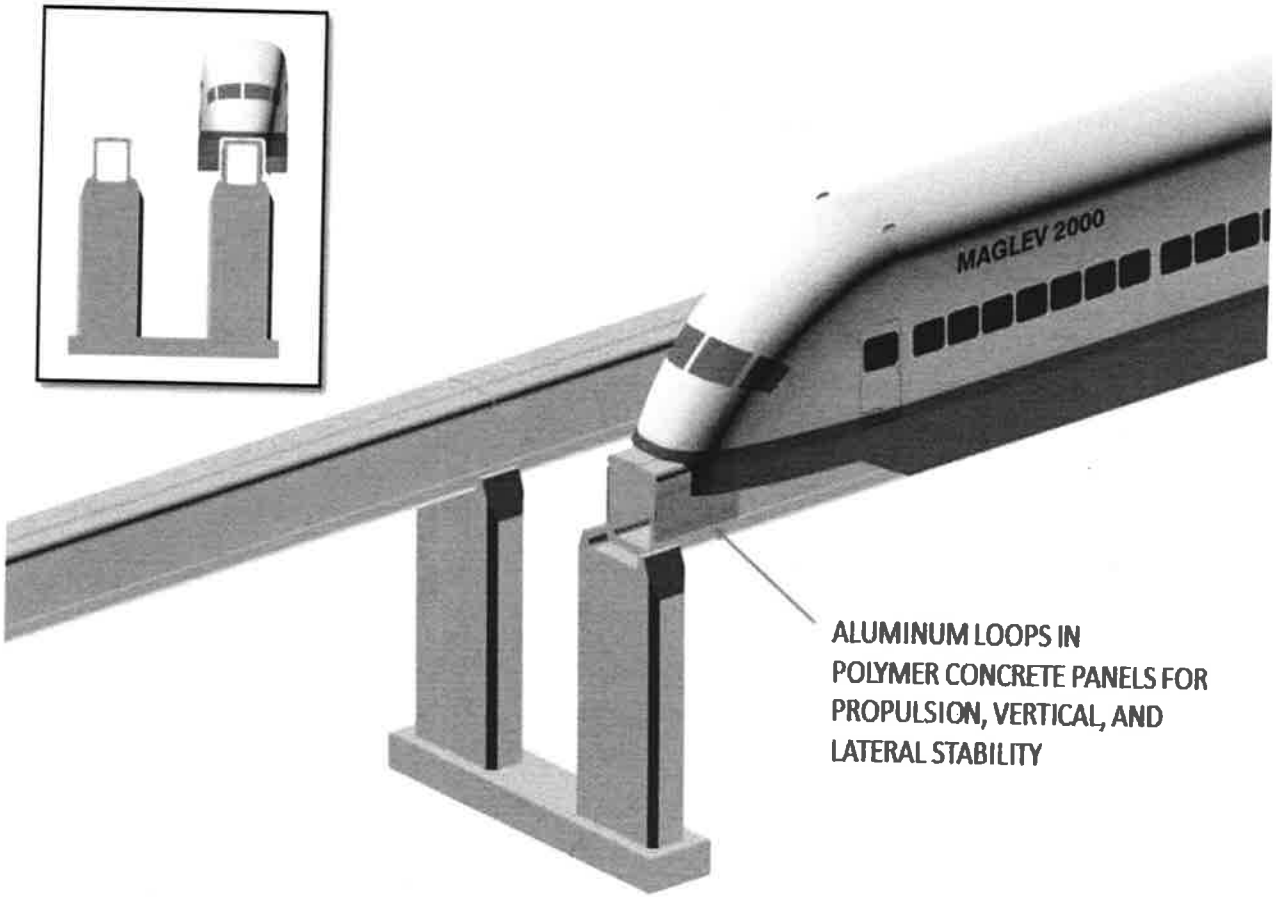

MAGLEV TEST FACILITY COMPONENTS

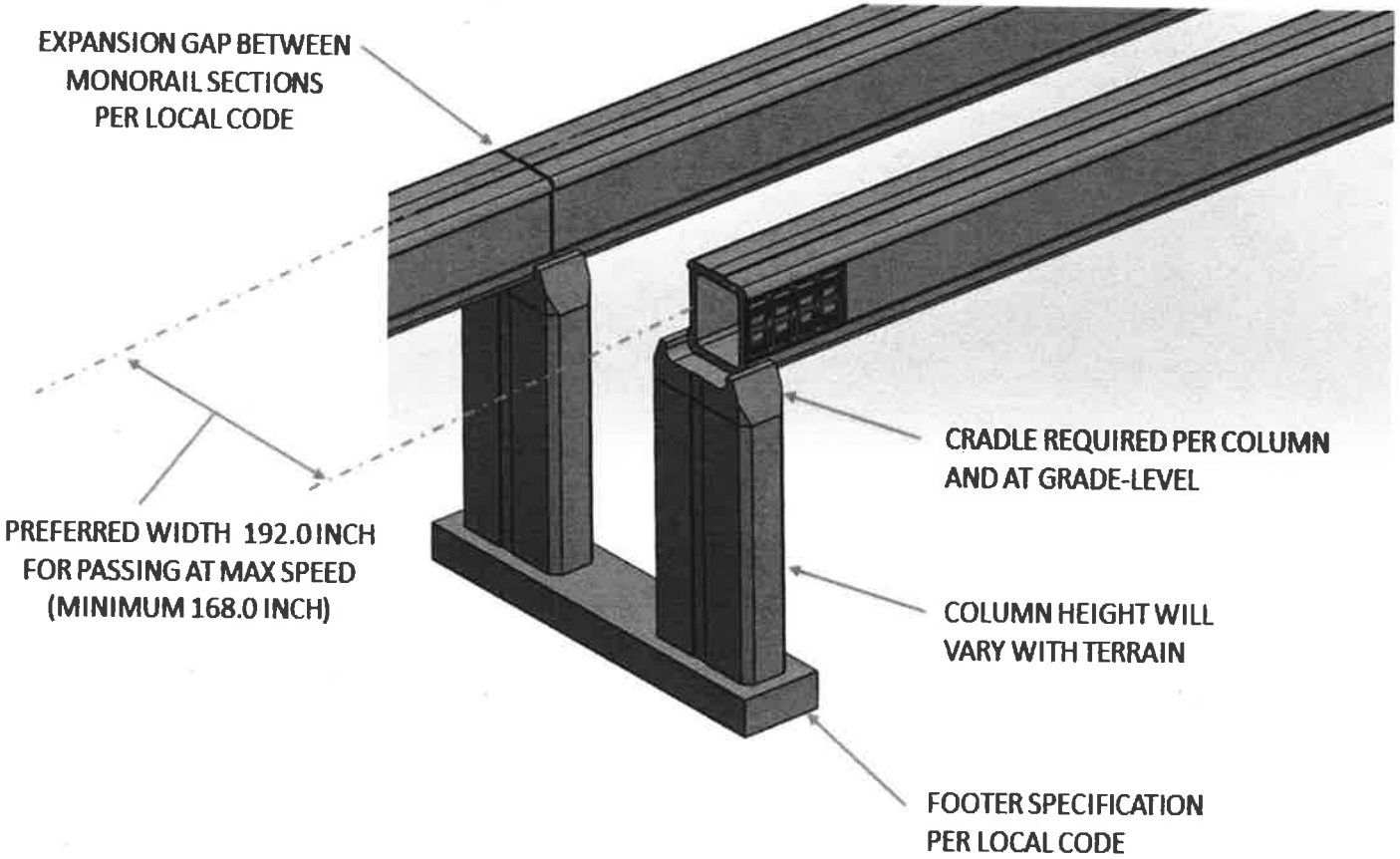

PREFABRICATED GUIDEWAY COMPONENTS

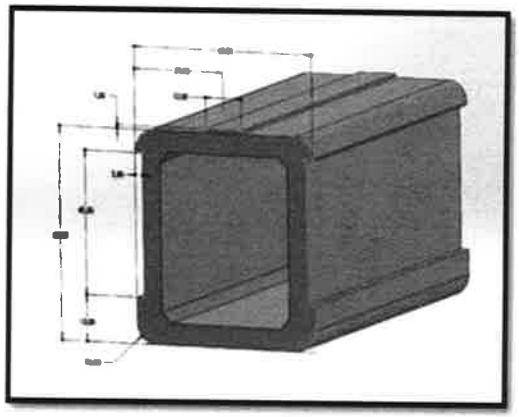

MONORAIL BEAM

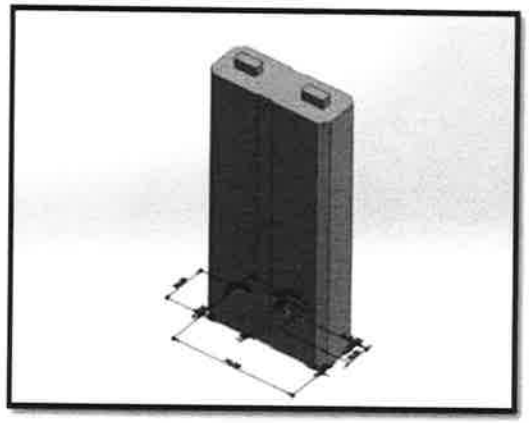

COLUMNS

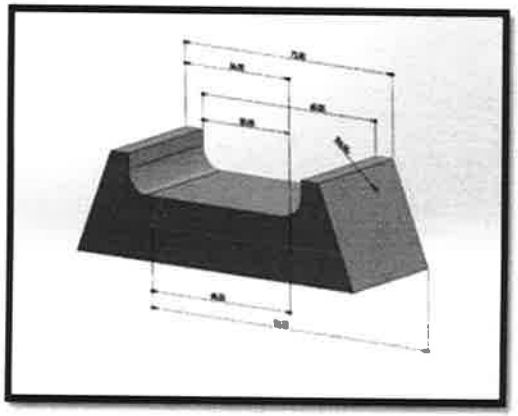

CRADLE

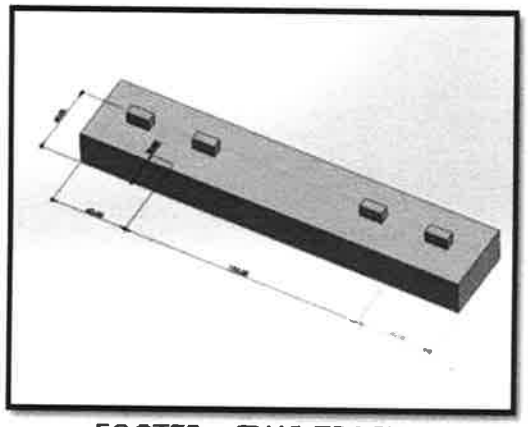

FOOTER – TWO TRACK

POST TENSIONED PRE-STRESSED CONCRETE BEAM

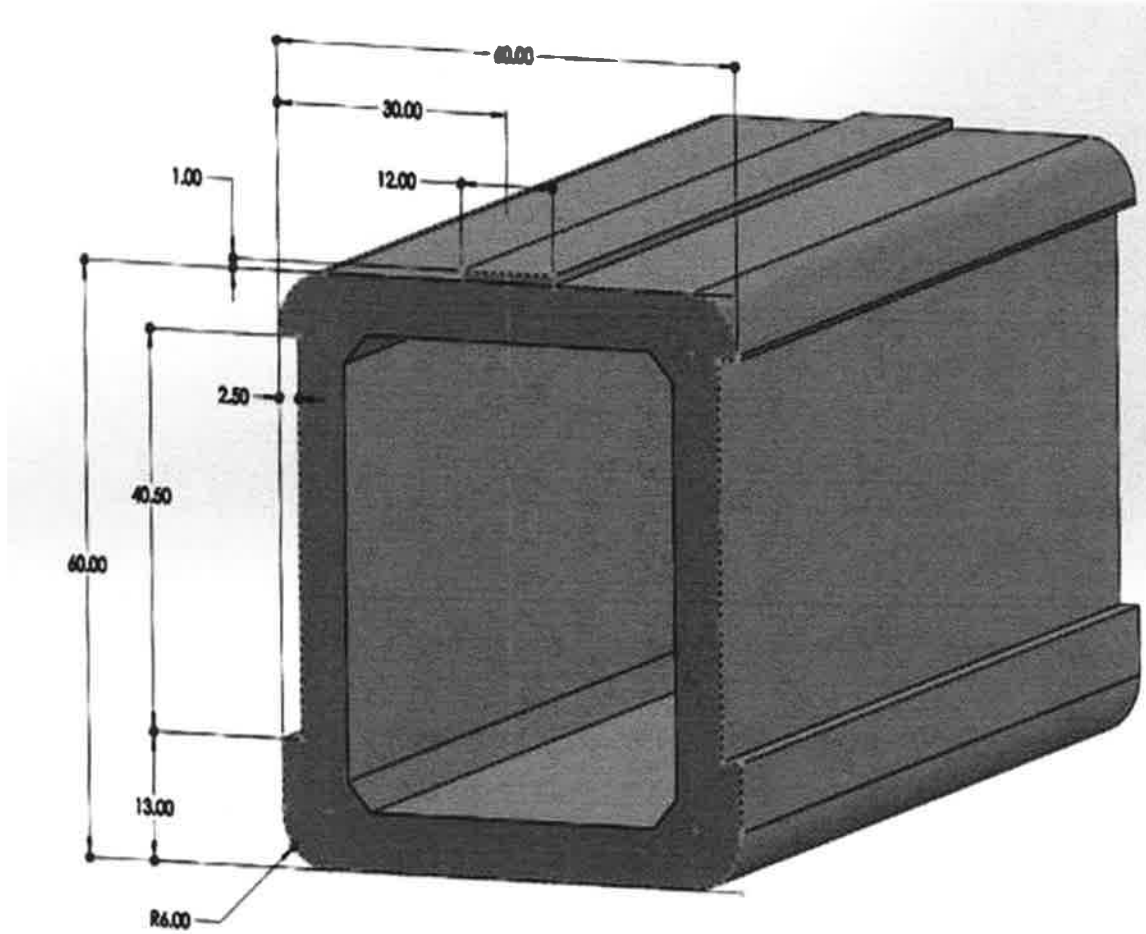

MONORAIL GUIDEWAY BEAM DESIGN

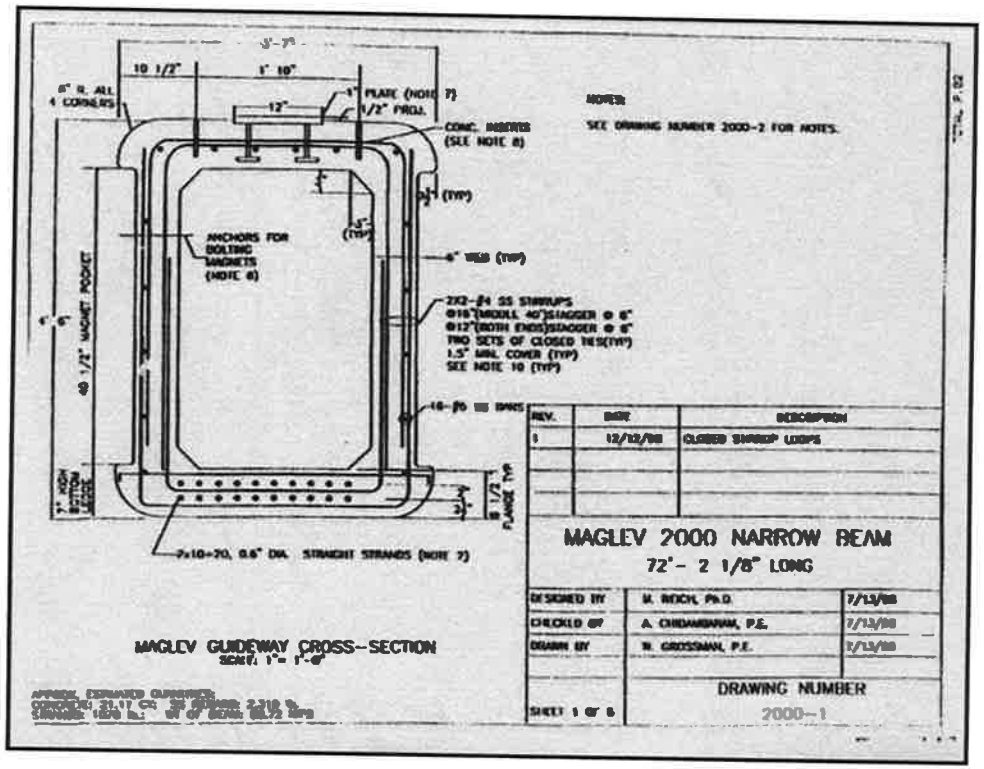

ACTUAL BEAM FABRICATED IN NJ AND SHIPPED TO FLORIDA

ALUMINUM COILS FOR LEVITATION AND PROPULSION

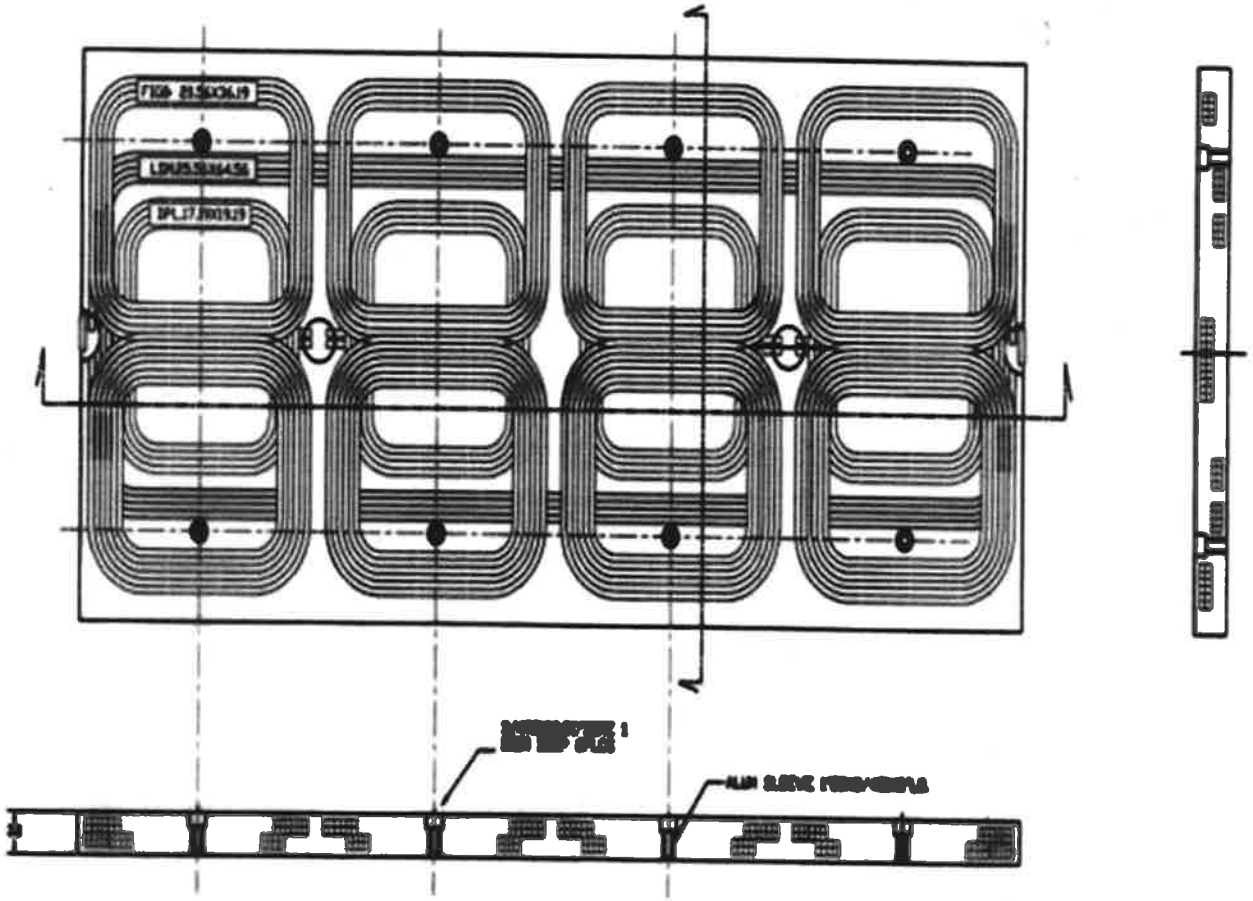

ALUMINUM COILS ENCAPSULATED IN POLYMER CONCRETE (CUT TO SHOW WIRE)

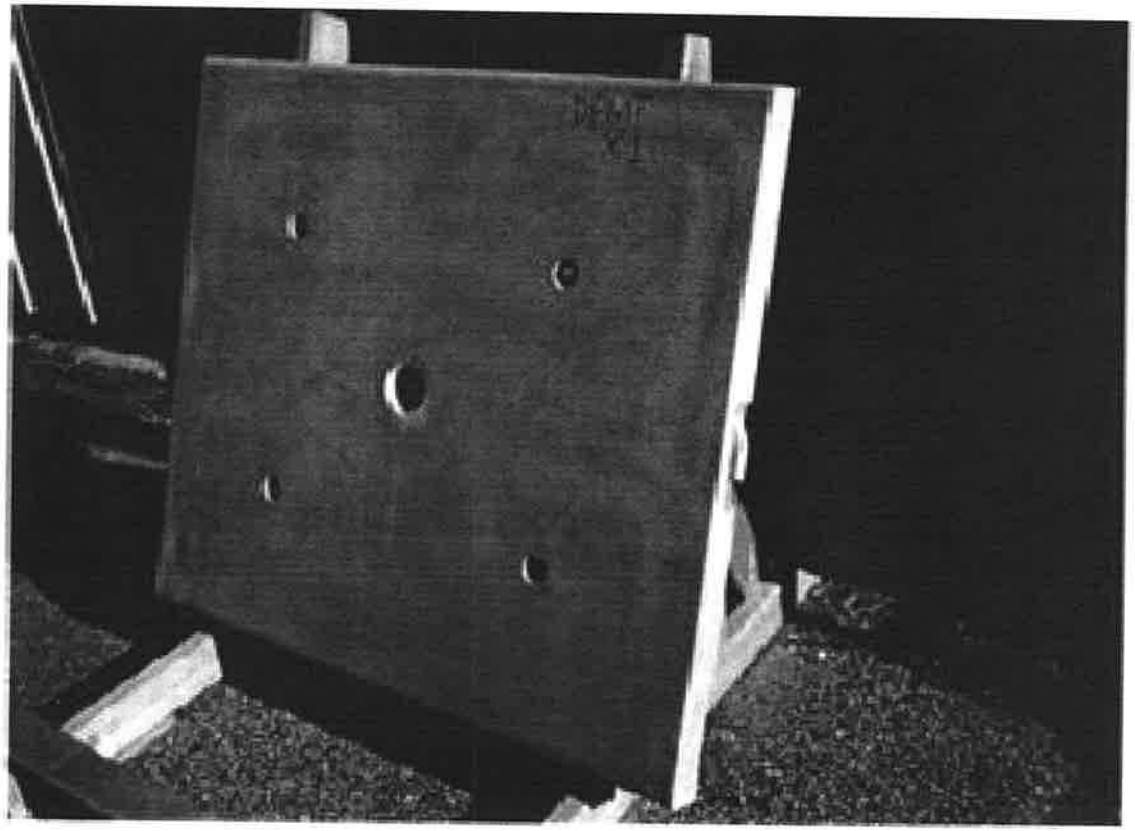

GUIDEWAY PANELS

Drawing of aluminum loop guideway panel providing vertical lift and stability, and linear synchronous propulsion	Completed Guideway Panel with Figure of 8 Dipole, and LSM Propulsion Loops
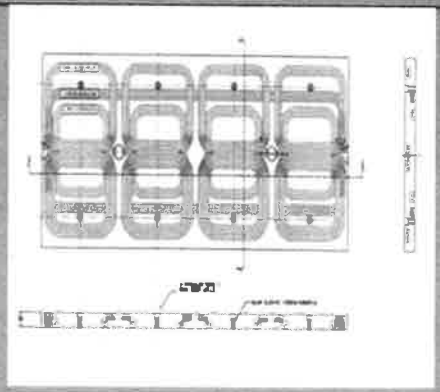	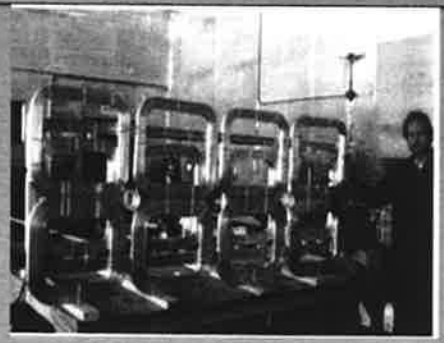
Guideway Loop Panel Encased in Polymer Concrete Matrix	**Polymer Concrete Panel with Enclosed Aluminum Loop Exposed for 2 years to Outdoor Environment with Multiple Freeze-Thaw Cycles**
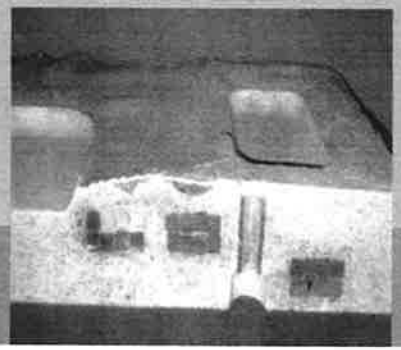	

QUADRUPOLE MAGNET MODULES

Cross Section of Quadrupole Magnet With 2 Superconducting Loops of Opposite Magnetic Polarity Enclosed in Cryostat

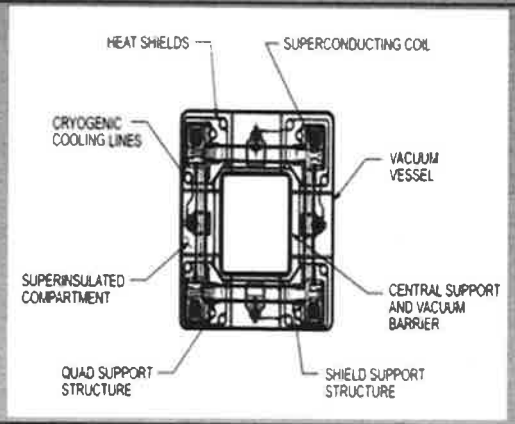

NbTi Superconducting Loop for Maglev 2000 Quadrupole. 600,000 Amp Turns Capability

NbTi Superconducting Loop Enclosed in Stainless Steel Jacket that Contains Liquid Helium Coolant

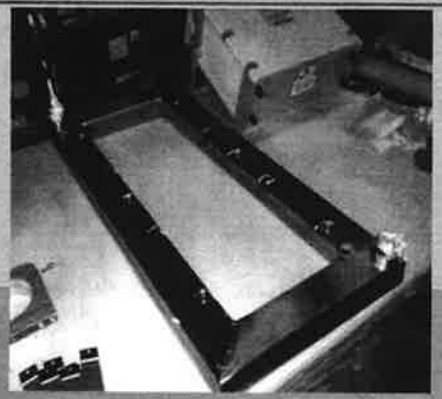

Assembly of Maglev 2000 Superconducting Quadrupole into Cryostat– Successfully Tested at Design Current of 600,000 Amps

QUADRUPOLE MAGNETS IN INSULATION

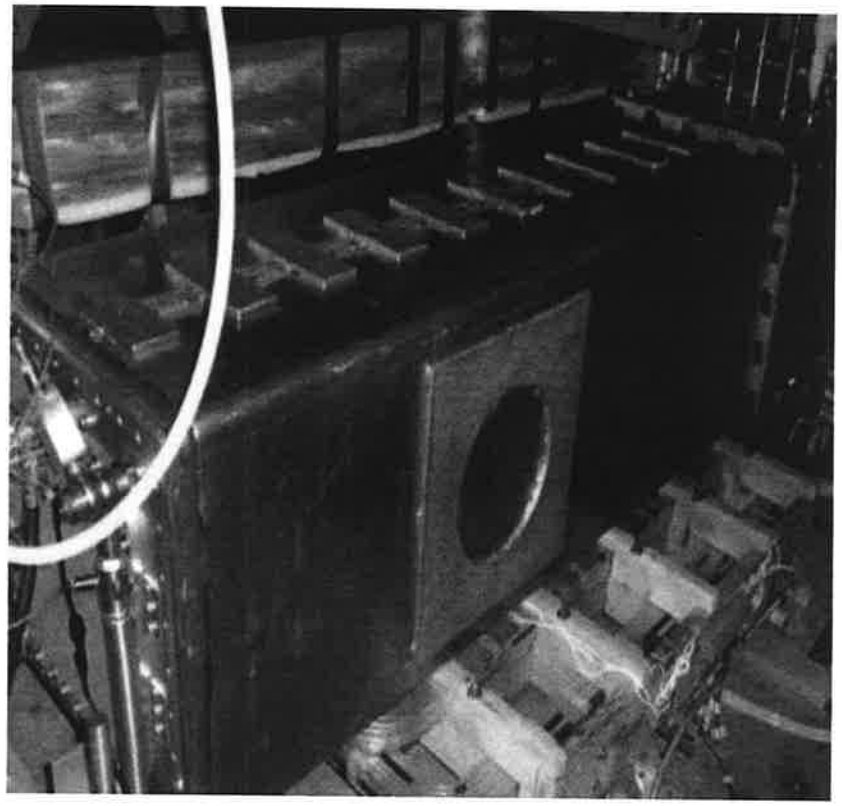

CONSTRUCTION TECHNIQUE SIMILAR TO D.C. SILVER LINE

NEC DEIS Comments - RECORD #249 DETAIL

Status : [redacted]

Record Date : 1/23/2016

First Name : Jan

Last Name : Magnussen

Stakeholder Comments/Issues :

The proposed track through Old Lyme would be an absolute disaster for the towns historical district, shopping center and the Art Academy. I cannot urge you enough to find another solution.

NEC DEIS Comments - RECORD #600 DETAIL

Status : [redacted]

Record Date : 2/8/2016

First Name : Kristin

Last Name : Magnussen

Stakeholder Comments/Issues :

The price of progress in updating the rail lines is not worth the loss of the home of American Impressionism- Old Lyme CT. Everything about this plan was underhanded as the town government and citizens of Old Lyme knew nothing about this until just recently. Shame on all of you!

NEC DEIS Comments - RECORD #2816 DETAIL

Status : [redacted]

Record Date : 2/16/2016

First Name : Brian

Last Name : Mahar

Stakeholder Comments/Issues :

Dear Federal Rail Administration,

"I oppose Alternative 1 of the Northeast Corridor Futures proposal because it will destroy the campus of Lyme Academy College of Fine Arts of the University of New Haven."

NEC DEIS Comments - RECORD #2883 DETAIL

Status : [redacted]

Record Date : 2/16/2016

First Name : Stephanie

Last Name : Maher

Stakeholder Comments/Issues :

As a resident of Palmer for over twenty years, I am hoping that this plan goes through and there is a rail stop in the town of Palmer. Some mill towns have bounced back, but many have not and Palmer is struggling and slowly dying. Young people are leaving and not coming back because there are no opportunities to keep them here. Our access to the Mass Pike, our location between Worcester & Springfield, out downtown area that is begging for a revitalization are reasons why a rail stop would change the lives of our residents, and bring hope for the future of our town.

NEC DEIS Comments - RECORD #2030 DETAIL

Status : [redacted]

Record Date : 2/15/2016

First Name : Viraj

Last Name : Mahida

Stakeholder Comments/Issues :

Dear Federal Rail Administration,

I support Alternative 1 of the Northeast Corridor Futures proposal because it will allow more passengers to travel major cities between Boston and Washinton DC. It will definitely help to reduce lots of traffic on I-95 and that needs to be done cause I-95 is being too much conjugated. Also it will help to prevent environmental pollution since more people will travel by Northeast Corridor. It will help university students commuting between main campus and the campus of Lyme Academy College of Fine Arts of the University of New Haven.

NEC DEIS Comments - RECORD #2033 DETAIL

Status : [redacted]

Record Date : 2/15/2016

First Name : Bhamini

Last Name : Mahida-solanki

Stakeholder Comments/Issues :

Dear Federal Rail Administration,

I support Alternative 1 of the Northeast Corridor Futures proposal because it will allow more passengers to travel major cities between Boston and Washinton DC. It will definitely help to reduce lots of traffic on I-95 and that needs to be done cause I-95 is being too much conjugated. Also it will help to prevent environmental pollution since more people will travel by Northeast Corridor. It will help university students commuting between main campus and the campus of Lyme Academy College of Fine Arts of the University of New Haven.

The Commonwealth of Massachusetts

William Francis Galvin, Secretary of the Commonwealth

Massachusetts Historical Commission

December 8, 2015

Amishi Castelli
NEC FUTURE Environmental Lead
Volpe National Transportation System Center
U.S. Department of Transportation
55 Broadway
Cambridge, MA 02142

Attn: Rebecca Reyes-Alicea

RE: Federal Railroad Administration Northeast Corridor Future Rail Project, Massachusetts. MHC #RC.52707.

Dear Ms. Castelli:

Staff of the Massachusetts Historical Commission (MHC), office of the Massachusetts State Historic Preservation Officer (SHPO), have reviewed the revised draft Programmatic Agreement (PA), and Draft Environmental Impact Statement (DEIS), received November 2 and 12, 2015 for the project referenced above.

The preliminary area of potential effect mapping provided to the MHC in DEIS Appendix A and draft PA Appendix B for portions of the project corridors in Massachusetts continue to include insufficient information for the MHC to offer comments on the proposed preliminary project area of potential effect, or recommendations for other potential interested and consulting parties in Massachusetts. The MHC looks forward to reviewing updated project mapping at a smaller scale and the FRA's determination of the project area(s) of potential effect for Massachusetts as project planning proceeds during Tier 2 projects. The MHC recommends that updated project mapping for the proposed project impact area base maps in Massachusetts utilize current MassGIS town boundaries and current aerial photographs to show existing conditions within the proposed railway corridor.

The MHC will participate in future consultation for the implementation of 36 CFR 800.4 to 6 for Tier 2 projects. As proposed in the DEIS project specific information for future Tier 2 projects will be submitted to the MHC by the involved federal agencies, and appropriate determinations and findings, including definition of areas of potential effect; and scopes for identification and evaluation efforts will be developed in consultation, to avoid, minimize or mitigate adverse effects to significant historic and archaeological resources in Massachusetts.

The MHC looks forward to reviewing the final PA that includes a revised Appendix I incorporating the following language to assist in future consultation with the MHC for conducting environmental review projects in Massachusetts:

Please delete lines 81 through 86 of Section IV and replace with the following language: Archaeological investigations, including archaeological reconnaissance surveys that may be required for portions of the project in Massachusetts shall be conducted under a State Archaeologist's permit (950 CMR 70). A State Archaeologist's permit application shall be submitted to the MHC by a qualified professional archaeologist with relevant previous experience in the region and glaciated Northeast retained by the project proponent. The State Archaeologist shall be consulted concerning an appropriate curatorial facility for all collections from field investigations conducted under permit.

220 Morrissey Boulevard, Boston, Massachusetts 02125
(617) 727-8470 • Fax: (617) 727-5128
www.sec.state.ma.us/mhc

Please also add the following paragraph to Section IV: "Within Massachusetts portions of the project impact area on non-federal lands, identified human remains shall be protected and treated consistently with the Massachusetts Unmarked Burial Law (Massachusetts General Laws, Chapter 38, § 6; Chapter 9, §§ 26A and 27C; and, Chapter 7, § 38A; all as amended). Any non-Native American human remains shall be treated in accordance with the Massachusetts Historical Commission "Policy and Guidelines for Non-Native Human Remains Which Are Over 100 Years Old or Older."

The MHC looks forward to consultation with the FRA on the continued development of the project.

These comments are offered to assist in compliance with Section 106 of the National Historic Preservation Act of 1966, as amended (36 CFR 800) and M.G.L Chapter 9, Sections 26-27C (950 CMR 70-71). If you have any questions or require additional information, please contact Jonathan K. Patton, Archaeologist/Preservation Planner, at this office.

Sincerely,

Brona Simon

Brona Simon
State Historic Preservation Officer
Executive Director
State Archaeologist
Massachusetts Historical Commission

xc: Susan Anderson, AECOM, Glen Allen, VA
Bettina Washington, Wampanoag Tribe of Gay Head (Aquinnah)
Ramona Peters, Mashpee Wampanoag Tribe
John Eddins, ACHP
Catherine Labadia, CT Historic Preservation & Museum Division
Jeff Emidy, Rhode Island Historic Preservation & Heritage Commission
David Mohler, Executive Director, Office of Transportation Planning, MADOT

William Francis Galvin
Secretary of the Commonwealth
Massachusetts Historical Commission
220 Morrissey Boulevard
Boston, MA 02125

BOSTON
MA 021
08 DEC '15
PM 9 L

U.S. POSTAGE PITNEY BOWES
ZIP 02125 $ 000.48[5]
02 1W
0001402800 DEC 08 2015

Amiahi Castelli
Environmental Scientist
US Dept of Transportation-Volpe Center
55 Broadway
Cambridge, MA 02142

02142109999

Submission ID # 53

The Commonwealth of Massachusetts

William Francis Galvin, Secretary of the Commonwealth
Massachusetts Historical Commission

December 8, 2015

Amishi Castelli
NEC FUTURE Environmental Lead
Volpe National Transportation System Center
U.S. Department of Transportation
55 Broadway
Cambridge, MA 02142

Attn: Rebecca Reyes-Alicea

RE: Federal Railroad Administration Northeast Corridor Future Rail Project, Massachusetts. MHC #RC.52707.

Dear Ms. Castelli:

Staff of the Massachusetts Historical Commission (MHC), office of the Massachusetts State Historic Preservation Officer (SHPO), have reviewed the revised draft Programmatic Agreement (PA), and Draft Environmental Impact Statement (DEIS), received November 2 and 12, 2015 for the project referenced above.

The preliminary area of potential effect mapping provided to the MHC in DEIS Appendix A and draft PA Appendix B for portions of the project corridors in Massachusetts continue to include insufficient information for the MHC to offer comments on the proposed preliminary project area of potential effect, or recommendations for other potential interested and consulting parties in Massachusetts. The MHC looks forward to reviewing updated project mapping at a smaller scale and the FRA's determination of the project area(s) of potential effect for Massachusetts as project planning proceeds during Tier 2 projects. The MHC recommends that updated project mapping for the proposed project impact area base maps in Massachusetts utilize current MassGIS town boundaries and current aerial photographs to show existing conditions within the proposed railway corridor.

The MHC will participate in future consultation for the implementation of 36 CFR 800.4 to 6 for Tier 2 projects. As proposed in the DEIS project specific information for future Tier 2 projects will be submitted to the MHC by the involved federal agencies, and appropriate determinations and findings, including definition of areas of potential effect; and scopes for identification and evaluation efforts will be developed in consultation, to avoid, minimize or mitigate adverse effects to significant historic and archaeological resources in Massachusetts.

The MHC looks forward to reviewing the final PA that includes a revised Appendix I incorporating the following language to assist in future consultation with the MHC for conducting environmental review projects in Massachusetts:

Please delete lines 81 through 86 of Section IV and replace with the following language: Archaeological investigations, including archaeological reconnaissance surveys that may be required for portions of the project in Massachusetts shall be conducted under a State Archaeologist's permit (950 CMR 70). A State Archaeologist's permit application shall be submitted to the MHC by a qualified professional archaeologist with relevant previous experience in the region and glaciated Northeast retained by the project proponent. The State Archaeologist shall be consulted concerning an appropriate curatorial facility for all collections from field investigations conducted under permit.

220 Morrissey Boulevard, Boston, Massachusetts 02125
(617) 727-8470 • Fax: (617) 727-5128
www.sec.state.ma.us/mhc

Please also add the following paragraph to Section IV: "Within Massachusetts portions of the project impact area on non-federal lands, identified human remains shall be protected and treated consistently with the Massachusetts Unmarked Burial Law (Massachusetts General Laws, Chapter 38, § 6; Chapter 9, §§ 26A and 27C; and, Chapter 7, § 38A; all as amended). Any non-Native American human remains shall be treated in accordance with the Massachusetts Historical Commission "Policy and Guidelines for Non-Native Human Remains Which Are Over 100 Years Old or Older."

The MHC looks forward to consultation with the FRA on the continued development of the project.

These comments are offered to assist in compliance with Section 106 of the National Historic Preservation Act of 1966, as amended (36 CFR 800) and M.G.L Chapter 9, Sections 26-27C (950 CMR 70-71). If you have any questions or require additional information, please contact Jonathan K. Patton, Archaeologist/Preservation Planner, at this office.

Sincerely,

Brona Simon

Brona Simon
State Historic Preservation Officer
Executive Director
State Archaeologist
Massachusetts Historical Commission

xc: Susan Anderson, AECOM, Glen Allen, VA
Bettina Washington, Wampanoag Tribe of Gay Head (Aquinnah)
Ramona Peters, Mashpee Wampanoag Tribe
John Eddins, ACHP
Catherine Labadia, CT Historic Preservation & Museum Division
Jeff Emidy, Rhode Island Historic Preservation & Heritage Commission
David Mohler, Executive Director, Office of Transportation Planning, MADOT

NEC DEIS Comments - RECORD #161 DETAIL

Status : [redacted]

Record Date : 1/12/2016

First Name : Matthew

Last Name : Mahler

Stakeholder Comments/Issues :

I strongly oppose any cross sound project, I feel the increased rail traffic will add to further urbanization of Long Island. The island and it's wetlands, pine Barrens and farm lands suffer enough, our water quality is poor and our bays are only now just beginning to heal. Cutting an hour or two off of some travelers time is not worth destroying the green spaces let in the shadow of NYC with urban sprawl that alway accompanies these projects, nevermind that the lirr already has enough difficulty maintaining the current levels of traffic.

NEC DEIS Comments - RECORD #1585 DETAIL

Status : [redacted]
Record Date : 2/15/2016
First Name : Dean
Last Name : Mahlstedt
Stakeholder Comments/Issues :

Ms. Carol Braegelmann
Office of Environmental Policy and Compliance
1849 C Street, NW-MS 2462-MIB
Washington D.C. 20240

RE: Tier 1 Draft Environmental Impact Statement (EIS) and Section 4(f) Assessment for NEC FUTURE, A Rail Investment Plan for the Northeast Corridor, Washington, DC, MD, DE, PA, NJ, NY, CT, RI, and MA

Dear Ms. Braegelmann:

As a citizen of Maryland and a lover of our state's few remaining wild places I am writing this letter in opposition to Alternate 3 in your rail plan.

This proposal would chop off 60 acres of the Patuxent Wildlife Refuge including pristine stream, wetland, riparian and forest habitats, critical to a number of at-risk bird species. It would destroy this valuable wildlife habitat in a region of Maryland where development has taken an immense toll on natural resources, and in so doing would damage the ecological integrity of the largest remaining forest block in central Maryland-also recognized by Audubon Maryland-DC as an Important Bird Area (IBA) in 2006 because it provides habitat for several declining bird species, including Eastern whip-poor-will, wood thrush, Kentucky warbler and prairie warbler.

The Patuxent Research Refuge was established in 1973 specifically for the purpose of upholding and promulgating the Migratory Bird Conservation Act. The Act was passed to more effectively meet the U.S. migratory bird treaty obligations through the acquisition of land and water for the perpetual preservation for birds.

Allowing the proposed rail line to destroy a publicly-owned natural resource at the Patuxent Research Refuge would set a dangerous precedent for the country's most beautiful and biologically diverse landscapes. Feasible and less destructive alternatives to incising a wildlife refuge exist. Please choose an alternate that does not disturb a national treasure.

Sincerely, Dean C. Mahlstedt

Save the Date! "I Bird, I Vote"

NEC DEIS Comments - RECORD #2884 DETAIL

Status : [redacted]

Record Date : 2/16/2016

First Name : Edith Roberts

Last Name : Main

Stakeholder Comments/Issues :

I grew up in Old Lyme, CT, and my father (age 93) still resides at the address listed below. We are shocked and dismayed to find out that the center of our historic town would even be considered for a rail route. Perhaps the designers of the proposal have never walked where the tracks would go?

NEC DEIS Comments - RECORD #58 DETAIL

Status : [redacted]
Record Date : 12/8/2015
First Name : Kat
Last Name : Maines
Stakeholder Comments/Issues :

I am writing to support Alternative 3. The future of regional mobility needs to primarily rely on transit in order to stay competitive economically without betraying the tenants of environmental stewardship. I grew up in Boston and I hope to move back there after I finish school, but I also do not want to own a car wherever I move. Alternative 3 helps to make that more reasonable while still allowing for regional and intercity travel. I urge the FRA to support these rail enhancements.

Okay. The next speaker is Scott Maits.

SCOTT MAITS: Hi. Scott Maits from Philadelphia. M-A-I-T-S. Thank you for letting me address again the hearing here.

This is incredibly important for Wilmington, Delaware as it does not have an airport to have a high-speed line, even if not all the trains stop here, as could be the case. You would have more trains than you have today. They are downtown currently in the current station. It's a gorgeous station. It can be expanded. And if there's some not stopping, they wouldn't need to go through that way.

I'm an environmentalist. I ride my bike to Wilmington often from Philadelphia. Often. Usually. Tonight, I did not because of work.

Another ten-mile tunnel to get to

27

Rodney Square is not what the Northeast corridor can afford. As you know, I'm against the Philadelphia tunnel. It's 32 miles of single track to make the original ten-mile estimate. It's more than ten miles long, but you need multiple tracks at different places, of course.

It's also an environmental justice issue. If we go from 30th Street -- only if we go from 30th Street to the airport can Chester, Marcus -- Highland Avenue, Marcus Hook, Claymont have direct service to Philadelphia Airport, which would be a tremendous opportunity, economic opportunity, for them to do that. That might be -- so that would likely be separate service, but only can it go if this line is built this way would that be able to happen. We'd save 40 to 80 billion dollars on the Philadelphia line estimate by mine being the low and some other people going up to 80 with that.

One great idea that you have, of course, is wonderful, and I haven't had time to

28

look at any of the other stuff is the electric grid. Any line going downstate in Delaware, Atlantic City, North coastline, Long Island -- the Northeast corridor, it goes to Long Island. -- should tap in to offshore power. Solar, title, offshore wind, whether it's in the mountains or down here provide the right-of-way for the -- for the power companies. In exchange, they electrify. That should be part of recommendations here.

Let's see if I have anything -- I have a lot of comments that I'll probably get up here again to talk about some of them.

But we do need to build this line. It's absolutely economically a prerequisite to do things.

Oh, yeah. I know. There was some talk in New Jersey about another right-of-way. New Jersey Turnpike and the old trolley line that used to go between Newark and Trenton. And, unfortunately, they are no -- I looked at them

29

last night, and it was very clear. There was a hundred crossings on the trolley line. The turnpike would skip Philadelphia basically. I couldn't figure out how to get back over to Philly. It would require more bridges and all.

Other than that, the work of a lot of the activists up there are excellent. I see no reason the Northeast corridor can't go through New Jersey and basically where it's being aligned in most places with the exception of Philadelphia for that other tunnel and all.

So I'm advocating an alternative to combine with an alternative 3, the most transformative alternatives that you can come up with, and most affordable because we have to build the tunnels in Baltimore. We have to build them in New York. We're going to need small tunnels in other places, including in New Jersey.

Okay. Thank you very much.

RUBY SEIGEL: Thank you, Scott.

30

SCOTT MAITS: Mm-hmm.

34

SCOTT MAITS: It was a wave.

RUBY SEIGEL: Okay. Hold on just one second, Scott. Let me just see if there's someone who wants to speak for the first time.

AUDIENCE MEMBER: Actually, I was wondering if there's a question-and-answer session.

RUBY SEIGEL: We'll be happy to answer your questions when I close the public testimony portion. We'll be out at the open house boards. We'll be happy to answer your questions there.

Is there anyone who would like to make a public statement either in this open mike forum or -- yes? No?

Okay. So, Scott, would you like to come up again?

SCOTT MAITS: Please. Thank you.

RUBY SEIGEL: Okay. Scott.

SCOTT MAITS: Thanks again. And this has been a wonderful opportunity to speak to this at length, and I hope to get as many of

35

these comments in writing with any other explanations and other details that I have.

I'm a long-time transportation advocate. I was on the East Coast Greenway for our bike friends here, and I advocate that our bike advocates really push for this line. This is absolutely critical to make happen.

One last thing about the New Jersey trolley thing, which is not really in consideration, but it actually goes in city streets and makes all sorts of different turns.

As I commented before, I am concerned with the New London bypasses. That would be the biggest losing city if that low-hanging -- seemingly low-hanging fruit happened or was done to speed up the line to Boston. If we did go out Long Island and to New Haven from Ronkonkoma, that would allow a very fast service even on the slow section between New Haven and Kingston where it then speeds up to 150 miles an hour, even if the through-line went to Hartford

36

and then to Providence that way. So I think that's acceptable.

I just want to emphasize. I know I've said it again. Because it is such low-hanging fruit that it will be pushed for, and it is a feasibility issue. And perhaps with New York's

new-found enthusiasm in certain corridors, and Albany and other places, and possibly in the city itself that could happen sooner than later and stuff.

One other thing about that line is the freight. You want to pay for these tunnels. Baltimore, New York City, Long Island. These things can -- freight can help pay for the tunnels. Auto trains for the people that will continue to drive can help pay for this. I know I've mentioned this before, but it's absolutely critical.

People are scratching their heads. Where is the money going to come from? It's got to come from all sources, including sharing

37

tunnels, but reducing where they're needed. And if anyone does not know, high-speed rail makes money. It can pay construction costs as long as the lines are not exorbitant in costs to bill. They will be exorbitant no matter what, but they can be a lot less if you're not choosing all the tunneling options that are somewhat unnecessary in many cases like in Philadelphia, for instance.

One other thing I'd like to comment that I have here right now is that -- and this is related. It doesn't sound like it is, but the FRA is -- has the power to regulate speed of trains and other different things. Obviously, speed is very important to get people out of their cars. It must go faster than the cars. And, of course, we have existing lines that we're trying to do that on.

The TALGO, which was first built here in Wilmington, Delaware, the Italian company developed it. They built a tiny, little

38

prototype. They built the first full-blown train here and in Berwyn -- Berwick, PA. I don't know the connections exactly to Wilmington, but it was the same company. And that was 1947.

By 1958, the Pullman-Standard, Baldwin, their last locomotive at any time that they ever built was a small TALGO diesel. And then another consortium built a set, too, and they ran on several railroads. Unfortunately, they were never allowed to go what the theoretical speed was, which is 30 percent faster than standard trains. That is something that the TALGO people with all their experience stick to